Building the ultimate computer!

SILICON CHIP

JUNE 2001
$6.60* INC GST NZ$7.50 INC GST
ISSN 1030-2662
06
PRINT POST APPROVED - PP255003/01272
9 771030 266001
siliconchip.com.au

FREE!

VINTAGE RADIO · AUTO ELECTRONICS

DICK SMITH ELECTRONICS

01 catalog on CD-ROM

Australia only

DICK SMITH ELECTRONICS
catalogue cd-rom
winter 2001 edition

Here's the fun and easy way to find Dick Smith Electronics products!

Load your CD-ROM today for:
- Dick Smith Electronics Annual Catalogue
- AOL Internet Starter Kit

Discover AOL and the Internet TODAY!

AOL
the net made easy!

SEE INSIDE FOR DETAILS...

IF THIS CD-ROM IS MISSING, ASK YOUR NEWSAGENT

UNIVERSAL FAST BATTERY CHARGER

... the only charger you will ever need!

PHONOME

. . . lets you phone home and listen in, turn things on and off . . .

L'IL SNOOPER

. . . auto step or manual switch between video cameras. . .

There's no end to your bookshelf . . .

If you can't find that reference book or textbook you need in your library, try ours!

NEW SOFTCOVER TITLES: SO HOT THEY'RE SIZZLING!

High-Power Audio Amp Construction Manual

G. Randy Slone 0071341196 ARP$57.95

Ideal for audiophiles, electronics hobbyists and audio engineers, here is the ultimate audio amplifier dream-to-reality book, giving you leading-edge electronics tools for designing every detail of a superior high-power amplifier. Includes complete amplifier projects you can build.

The Robot Builder's Bonanza, 2nd edition

Gordon McComb 0071362967 ARP$47.95

The latest edition of this classic contains all new coverage on using microcontrollers in design, the essentials of robotics programming, functionoids with LEGO Mindstorms, remote controlled robots and using the Basic Stamp, BasicX and other microcontrollers. This book gives the beginners an excellent foundation in robotics.

Practical Electronics for Inventors

Paul Scherz 0070580782 ARP$69.95

Gives beginner hobbyists and inventors the information you need, in a format you can work with. Packed with hand drawn illustrations, this crystal-clear learn-as-you-go guide shows you what a particular device does, what it looks like and how it compares with similar devices. A concise easy-to-understand overview of all major electronic elements.

Beginner's Handbook of Amateur Radio, 4th edition

Clay Laster 0071361871 ARP$78.95

Used by thousands of ham operators to understand and set up their first shortwave transmitters, this title is an exciting introduction to shortwave and contains all the guidance you need to become a ham radio operator

Master Handbook of Acoustics, 4th edition

F. Alton Everest 0071360972 ARP$62.95

Targeted at hobbyists, electronics enthusiasts and audiophiles, this handbook makes the science of sound understandable. A friendly, practice-oriented tour of audio principles, it includes chapters on acoustical software solutions, acoustic measurements and calculations and guidance on small recording and voice-over studios.

Radio Signal Finding

Jim Sinclair Australian author

0071371915 ARP$68.95

Written by Australian author, Jim Sinclair, this book provides dozens of ways to have more fun with short-wave. Loaded with tested advice and strategies it shows you how to enhance your ham radio listening experience anywhere, anytime.

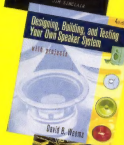

Designing, Building and Testing Your Own Speaker System

David B. Weems 007069429X ARP$49.95

This bestseller continues to set the standard for accessible, up-to-the-minute guidance on designing, building and testing speakers that sound as good as any system you can buy for hundreds of dollars less. Shows you how to choose speakers best suited for various uses, set up a home system and critically evaluate speakers by ear if you lack test equipment.

Programming & Customizing the Basic Stamp 2nd edition

Edwards 0071371923 ARP$89.95

This guide gives you a comprehensive tutorial on the easy to use BASIC Stamp single-board computer, which runs a PIC Microcontroller, and doesn't require you to do any assembly language programming. Second edition contains a new section on Stamp-specific and Stamp-friendly peripheral devices and a new chapter on Applying the BS2-SX.

NEW: PIC MICRO TITLES

Programming & Customizing PICmicro Microcontrollers, 2nd edition

Mike Predko 0071361723 ARP$94.95

Details the features of the PICMicro and demonstartes how to use these embedded chips to access and control many different devices. This book shows you what happens within the PICmicro when an instruction is executed, and it demonstrates how to interface PICmicros with external interfaces.

PIC Microcontroller Project Book

John Iovine 0071354794 ARP$62.95

Bound to spur your imagination and inspire plans for using PICs in new products and in projects of your own. This beginners book shows you how to program your chip, make your chip count numerically, deliver messages on a liquid crystal display, synthesize human speech, add sensing abilities to robots and much more. Includes 12 incredible projects that you can build.

All prices include GST

McGraw Hill books are available from Dick Smith, Jaycar, Altronics, Technical Books Melbourne and all good bookstores

Contents

SILICON CHIP
Vol.14, No.6; June 2001

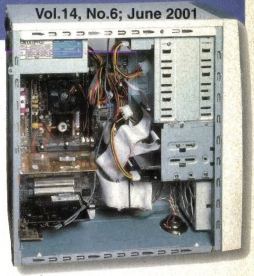

A PC To Die For; And You Can Build It Yourself – Page 4.

Fast Universal Battery Charger – Page 24.

Phonome: Call, Listen In & Switch Devices On & Off – Page 34.

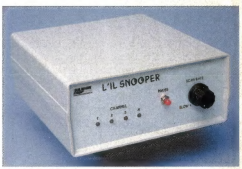

L'il Snooper: A Low-Cost Camera Switcher – Page 70.

FEATURES

12 Weird & Wonderful: New Generation Pilotless Aircraft
Global Hawk isn't the only player on the unmanned aerial vehicle (UAV) scene. Here's a look at some other innovative designs – by Bob Young

19 Win Two Uniden Mini 2-Way Radios
Would you like the chance to win two Uniden UH-040XR UHF CB radios? Just tell us in 50 words or less what you would use them for

PROJECTS TO BUILD

24 A Fast Universal Battery Charger
It charges nicad, NiMH, lithium-ion and SLA batteries, as well as conventional car and bike lead-acid batteries. Build it and solve all your charging problems in one hit – by John Clarke

34 Phonome: Call, Listen In & Switch Devices On & Off
Simple device lets you call home, switch devices on and off and even listen for any sounds. There's no connection to the phone line – by Leon Williams

70 L'il Snooper: A Low-Cost Camera Switcher
Monitor up to four security cameras on a single monitor with this easy-to-build unit. It automatically selects each camera in turn – by Jim Rowe

80 A PC Games Port Tester
So your joystick doesn't work? Is it the games port, a software problem or the joystick itself? This simple device will tell you if the games port is OK – by Trent Jackson

COMPUTERS

4 A PC To Die For – And You Can Build It For Yourself
Building you own PC is a lot of fun and you get to know exactly what goes into the machine. We show you how to go about it – by Greg Swain

62 Using Linux To Share An Internet Connection; Pt.2
Our topics this month include connecting to the Internet, setting up demand dialling and installing a firewall – by Greg Swain

SPECIAL COLUMNS

58 Serviceman's Log
A tangle of faults in jungle ICs – by the TV Serviceman

94 Vintage Radio
The miniature STC A-141 mantle radio – by Rodney Champness

DEPARTMENTS

2 Publisher's Letter
32 Circuit Notebook
48 Mailbag
57 Book Reviews
85 Subscriptions Form
89 Products Showcase
99 Ask Silicon Chip
101 Notes & Errata
102 Market Centre
104 Advertising Index

SILICON CHIP
www.siliconchip.com.au

Publisher & Editor-in-Chief
Leo Simpson, B.Bus., FAICD

Production Manager
Greg Swain, B.Sc.(Hons.)

Technical Staff
John Clarke, B.E.(Elec.)
Peter Smith
Ross Tester
Rick Walters

Reader Services
Ann Jenkinson

Advertising Enquiries
Ross Tester
Phone (02) 9979 5644
Fax (02) 9979 6503

Regular Contributors
Brendan Akhurst
Rodney Champness
Julian Edgar, Dip.T.(Sec.), B.Ed
Jim Rowe, B.A., B.Sc, VK2ZLO
Mike Sheriff, B.Sc, VK2YFK
Philip Watson, MIREE, VK2ZPW
Bob Young

SILICON CHIP is published 12 times a year by Silicon Chip Publications Pty Ltd. ACN 003 205 490. ABN 49 003 205 490 All material copyright ©. No part of this publication may be reproduced without the written consent of the publisher.

Printing: Hannanprint, Dubbo, NSW.

Distribution: Network Distribution Company.

Subscription rates: $69.50 per year in Australia. For overseas rates, see the subscription page in this issue.

Editorial & advertising offices:
Unit 8, 101 Darley St, Mona Vale, NSW 2103. Postal address: PO Box 139, Collaroy Beach, NSW 2097.
Phone (02) 9979 5644.
Fax (02) 9979 6503.
E-mail: silchip@siliconchip.com.au

ISSN 1030-2662

* Recommended and maximum price only.

PUBLISHER'S LETTER

SILICON CHIP: on the upward path

Are you one of the many readers concerned that SILICON CHIP is about to radically change its format or editorial content? Over the last few months there have been a number of changes in the marketplace, with some imported electronics magazines becoming no longer available and a major Australian magazine changing its format and content to suit its changing audience. So many readers have phoned, emailed, written and faxed us, asking to be reassured that we were not about to change our approach.

It is very gratifying that so many readers do like our editorial content and presentation and that they don't want us to change – not a bit. Well, the good news is that we have no major changes in mind.

However, we will continue to make incremental changes in content and presentation, just as we have ever since we started SILICON CHIP in 1987. In the last 18 months, for example, we have put a lot more effort into the circuits and other diagrams, using colour as much as possible, to lift the presentation. Staff member Peter Smith has been largely responsible for all this extra work and while we think it has made a very worthwhile difference, not many readers have commented about it or anything else; until now.

Similarly, with more recent issues, we have increased the size of the magazine by eight pages and now the whole magazine is presented in full colour whereas before, some sections only had spot colour. We are also attempting to include more computer content although I hasten to add, not at the expense of do-it-yourself project articles.

I should also add that we have no intention of dropping the Vintage Radio pages. There was a flurry of correspondence on this topic a few months ago and a number of readers jumped to the conclusion that maybe we were about to drop it. No way. In fact, one of our readers, on renewing his subscription, wrote that if Vintage Radio and Serviceman's Log were dropped, he would immediately cancel out. Hmm – well at least we know where we stand as far as he is concerned. I am very pleased to report that our subscriptions have taken a significant lift in the last few months, so we must be doing something right.

On the other hand, we often feel a little let down when an issue that we have put a lot of work into (as we always do) does not sell as well as we thought it would. We hear from some readers that "they only buy when something interests them". But we need your support on a consistent and continuing basis if we are going to continue to grow the magazine. Producing eighty or ninety pages of editorial every month is a very big effort for a small publishing company, so we really do need every bit of support we can get, both from readers and advertisers. We also welcome contributions.

If you think an issue of the magazine is a little weak for some reason, please tell us about it. Don't just "not buy it". Or if you want articles on a particular topic, please tell us about that too. After all, email makes it dead easy to make your views known. On the other hand, if you think that some issue or article was great, please let us know about that as well. Like everyone else, a little positive feedback goes a long way.

In the long-term, we are striving to be the world's best electronics magazine. We want to continue to provide the best electronics information to all electronics readers, both young and old. We believe we are well along that path. With your constant support, we will achieve that goal.

Leo Simpson

MicroGram Computers

THIS MONTH'S SPECIAL!
15" LCD Monitor
Inputs - VGA, S-Video, composite video, stereo audio. Maximum resolution 1024 x 768. Twin internal speakers. Cat. 4652-7
NORMALLY $1599
THIS MONTH ONLY $1549
While stocks last

Multi-PC Controllers

Cat. 11654

Save time, space and money by using one keyboard, monitor and mouse to control up to sixteen PCs. Our Multi-PC Controllers are available to control 2, 4, 8 or 16 PCs & operate in DOS, Win 3.x/9x/ME/NT/2000, Netware UNIX and Linux environments. PC selection is via a push button or keyboard hot keys.

Cat. 11654 2 way PS/2 **$199**
Cat. 11655 4 way PS/2 **$389**
Cat. 11656 8 way PS/2 **$949**
Cat. 11657 16 way PS/2 **$1299**

Cat. 11655

Hard Drive Controllers

Cat. 2848

Ultra DMA100 IDE controllers are available as standard or RAID. Will co-reside with onboard IDE devices.

Cat. 2827 Ultra DMA100 **$119**
Cat. 2848 Ultra DMA100 RAID **$139**

Look Mum - No Wires & 11Mbps!

Cat. 11339

Scenario 1: Set up a LAN of wireless networked PC's. Connect notebooks and/or PC's in difficult to wire environments such as historic buildings or frequently changing environments in retail shops, etc.

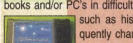
Cat. 11340

Scenario 2: Provide access to corporate facilities such as email and data bases for mobile workers e.g. doctors and sales staff.

Scenario 3: LAN interconnection for point-to-point link e.g. building to building.

Cat. 11339 Access Point **$1155**
Cat. 11349 Wireless LAN Acc. Point - Bridge **$1349**
Cat. 11340 PCMCIA Station Adapter - Internal Antenna **$490**
Cat. 11343 PCMCIA Station Adapter - External Antenna **$539**
Cat. 11344 PCMCIA to PCI Adapter **$89**
Cat. 11346 Directional Antenna **$259**

Long Range Bar Code CCD Scanner Gun

Cat. 8919

This new long range CCD scanner is excellent and leads the field with 300 scans per second and a reading distance up to 280mm (depending on barcode). The decoding engine will decode poor quality bar codes that even lasers can't read! Let us prove to you how good it is!

Cat. 8919 Scanner Gun **$399**
Cat. 8920 Stand **$49**

Microgram's customer service policy - No minimum order & no surcharge!

These keyboards are perfect for all your POS needs!

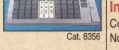
Cat. 8356

You can program all characters including alphanumeric characters. Also provides 55 programmable keys plus 1 programmable key-lock switch. No TSR needed, thus avoiding software application crashes. Another fantastic point: You can download an entire 55-key template into the non-volatile memory in approx. 7 seconds!

Cat. 8922

Cat. 8356 55 Key Re-program. Keyboard **$339**
Cat. 8922 As above, Model B **$269**

USB Products

Cat. 2622

Provides 2 or 4 USB ports with a bandwidth up to 12Mb/s. Supports real time dynamic insertion and removal of up to 127 devices.

Cat. 2622 USB card 2 Port PCI **$49**
Cat. 2829 USB card 4 Port PCI **$72**

Cat. 2828

These USB to serial converters allow a serial device to be connected via the PC's USB port.

Cat. 2828 USB to Serial - DB9M **$93**
Cat. 2801 USB to Serial - DB25M **$75**

A USB Universal Docking Station with 2 x USB Ports, one RS232 port, one printer port as well as two PS/2 ports.

Cat. 2830

Cat. 2830 USB Bay 2-USB 1-printer 1-RS232 and 2-PS/2 ports **$189**

VGA Monitor Splitters

Cat. 3070

These splitter modules enable up to 8 monitors to simultaneously share the same information of a host PC. The ideal way of providing multiple displays in class rooms, training rooms, airports, clubs, etc.Suitable for VGA, SVGA and XVGA monitors.

Cat. 3070 2 Way Splitter **$252**
Cat. 3055 4 Way Splitter **$299**
Cat. 3056 8 Way Splitter **$539**

Infrared Remote AV Selector

Do you have a VCR, PlayStation, DVD player or a cable box that you want to connect to your TV? It is simple with our remote AV selector. Just select the device you want to display on your TV by using any infrared remote controller. It's so easy to "teach" the selector which commands to use!

Cat. 8944 IR Remote AV Selector **$99**

Infra Red Links

Cat. 8421

Connect your mobile phone, Notebook, PDA etc to your computer. All products support the IrDA standard.

Cat. 8518 M/B connection 115Kb **$89**
Cat. 8941 M/B connection 4Mb **$89**
Cat. 8421 Serial Port conn. 115Kb **$99**
Cat. 8923 USB connection 4Mb **$143**

A/D - D/A Card

Cat. 17001

12-bit A/D & D/A card providing one 12-bit D/A unipolar channel with sixteen/eight 12-bit (single-ended/differential) A/D channels.

Cat. 17001 16 CH A/D 1 CH D/A **$327**

PCI Serial/Parallel Cards

Cat.2677

Multiport PCI Serial and Parallel cards are available for the majority of oop-erating systems. Most cards are also available in low profile design to suit Gateway computers etc.

Cat. 2616 1 Port Serial **$72**
Cat. 2617 2 Port Serial **$93**
Cat. 2674 4 Port Serial **$419**
Cat. 2677 8 Port Serial **$670**
Cat. 2687 1 Port Parallel **$82**
Cat. 2688 2 Port Parallel **$119**
Cat. 2620 2 Serial, 1 Parallel **$117**

TRAIN YOUR SELF ONLINE

Hundreds of courses on line from a low $15.95 pm. Check out the details on
www.tol.com.au

Training Online
Phone: 02 4389 8800 email: info@tol.com.au

We welcome **Bankcard, Mastercard and VISA**
NO SURCHARGE!

Product data sheets, website, online catalogue & shop: www.mgram.com.au

Phone: (02) 4389 8444
sales@mgram.com.au
info@mgram.com.au
FreeFax: 1 800 625 777

Australia wide express courier $12 (3kg max)

MicroGram Computers

Dealer Enquiries Welcome!

Unit 1, 14 Bon Mace Close,
Berkeley Vale NSW 2261
Vamtest Pty Ltd trading as
MicroGram Computers ABN 60 003 062 100

All prices subject to change without notice.

MGRM0801/2

A PC TO DIE FOR

Blinding speed, lots of memory, huge hard disk & DVD drive – you can have it all

Why build your own PC? Why not? It's fun and it's easy to do. You will know exactly what has been put into your machine and you will know enough to be able to do upgrades later on, if and when that becomes necessary.

By GREG SWAIN

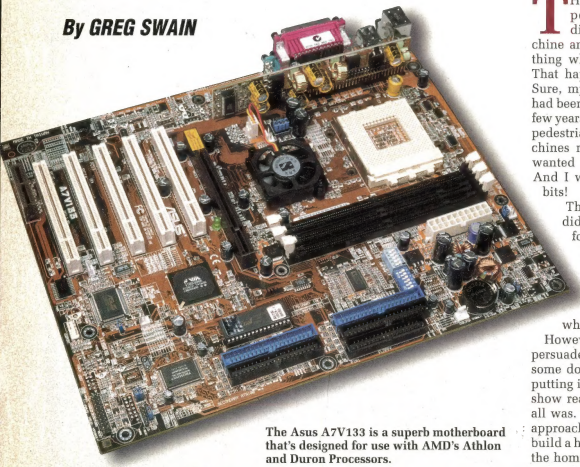

The Asus A7V133 is a superb motherboard that's designed for use with AMD's Athlon and Duron Processors.

THERE COMES a time for most people when they become dissatisfied with their old machine and start hankering for something which will really do the job. That happened to me just recently. Sure, my old machine was OK and had been functioning well for the last few years. But I knew that it was pretty pedestrian compared to the latest machines running at 1GHz or more. I wanted one – and I wanted it now. And I wanted it with all the fancy bits!

The only problem was, the boss didn't want to pay full whack for all the latest hardware that I wanted. Now Leo can be pretty unimaginative sometimes. He could see that the machine on my desk was still running OK – so why change it?

However, I eventually conned ... er persuaded ... him that we could save some dollars if I did all the work of putting it together and then we could show readers how straightforward it all was. That convinced him. So the approach outlined here shows how to build a high performance machine for the home. That meant it had to have

all the multi-media bits such as DVD-ROM drive, a video card with TV output sockets (S-video and video) and a first rate sound card. After all, that's what most dedicated PC users really lust after, isn't it.

Afterwards, it would be relatively easy for us to convert our "home" PC to office use by adding a network card and ZIP drive and by swapping the operating system from Windows Me to the much more robust (and expensive) Windows 2000. However, we wanted to initially use Windows Me, since this is the operating system most home users would use and we wanted to prove that it ran OK on our chosen hardware combination.

It's up to you whether you use exactly the same parts specified for our PC or substitute other brands. You might want to save money by using a lower cost motherboard, for example, or by downgrading the processor and/or hard disk drive. And, of course, a CD-ROM drive is much cheaper than a DVD drive.

You might also want to strip parts out of an existing machine but be careful of this approach. Some older parts, such as hard disk drives, video cards and slow memory, can seriously compromise performance. Of course, there's nothing to stop you from using floppy disk and CD-ROM drives, an existing keyboard and mouse, and an existing soundcard.

A word of advice here – try to buy the main bits, including the motherboard, CPU and hard disk drive, from the same retailer. That way, you can buy an OEM (original equipment manufacturer) version of the operating system, as well as an OEM mouse and soundcard, which is a "helluva" lot cheaper than buying the full retail versions.

Check on warranty too but be aware that warranty doesn't cover accidents – damage any of the parts and it's your wallet that will suffer.

The shopping list

The accompanying panel shows our shopping list, together with the total cost. It also shows the savings that can be made by downgrading the processor, DVD drive and memory. Let's look at some of the main bits.

At the top of the heap is the processor. 1GHz is the "magic" processor

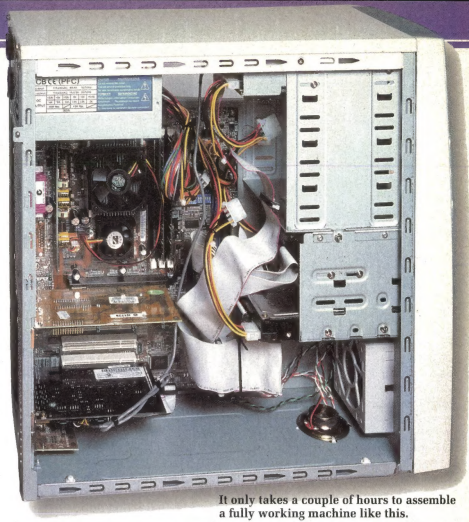

It only takes a couple of hours to assemble a fully working machine like this.

1GHz Computer System Shopping List

Item	Price
AMD Athlon 1GHz Processor	$389.00
Asus A7V133 Socket A Motherboard	$295.00
2 x 128Mb 133MHz SDRAM	$230.00
Prolink GeForce2 MX Graphics Card	$209.99
20GB Quantum Fireball AS ATA100 Hard Disk (7200 rpm)	$245.00
Mitsubishi 16/40x DVD-ROM Drive	$225.00
Creative SoundBlaster Live Value Soundcard (OEM)	$115.00
Panasonic 1.44Mb Floppy Drive	$30.00
Logitech 104-Key PS/2 keyboard	$59.00
Microsoft PS/2 Intellimouse (OEM)	$45.00
ATX Tower Case	$79.00
Philips 107S 17-inch Monitor	$445.00
Speakers: Philips Multimedia Pedestal	$49.00
Operating System: Microsoft Windows Me (OEM)	$225.00
Total:	**$2640.00**

Downgrade & Save: substitute 950MHz AMD Athlon CPU - save $50.00; substitute 850MHz Duron CPU - save $200.00; substitute Mitsubishi 52x CD-ROM drive for DVD drive - save $146; delete 128MB of memory - save $115.00.

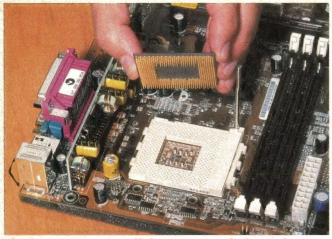

The first step is to install the CPU – it only fits in the socket one way, so don't force it. Try not to touch the pins, to prevent damage to the CPU by static electricity.

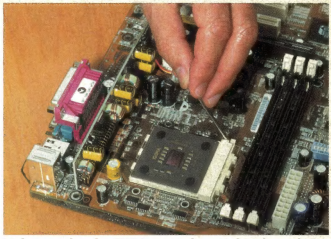

Make sure that the CPU is properly seated in the socket before closing the lever to lock it into position. The lever goes all the way down and is secured under a socket tab.

number these days and we've gone for a 1GHz AMD Athlon processor mated to an Asus A7V133 motherboard.

In terms of price/performance ratio, this combination is hard to beat. At around $389, the 1GHz Athlon processor sits right in the middle of AMD's range and costs considerably less than a similarly rated Intel Pentium III. You can shave $80 off the price by dropping back to a 900MHz processor or spend another $90 to get the 1.1GHz unit or $166 for the top-of-the-range 1.2GHz chip.

For those interested in the technical details, the Athlon processor runs off a 200MHz front-side bus (FSB), has 128KB of L1 cache and 256KB of L2 cache. Some versions can even run off a 266MHz FSB but these cost more than comparable 200MHz FSB processors. By contrast, a Pentium III processor runs off a 133MHz FSB and has 32KB of L1 cache (the L2 cache is the same as the Athlon's).

In non-technical terms, it means that the 1GHz Athlon processor gives you a lot of bang for your buck.

For those on a budget, you can cut costs by substituting an AMD Duron processor. These are available as 750MHz, 800MHz and 850MHz models and cost between about $145 and $225. The Duron is no slouch either; it's essentially a cutdown version of the Athlon and is an excellent choice for those on a budget.

The motherboard

You can't just buy any motherboard to go with your processor. That's because different processors use different sockets, so you must select a motherboard to suit. AMD Athlon and Duron processors both require "Socket A" motherboards and there are quite a few well-known brands to choose from.

The Asus A7V133 motherboard that we've specified is a beauty. This up-to-the minute design runs both the Athlon and AMD Duron processors and has a number of interesting features, including 200/266MHz front-side bus support for the CPU and support for up to 1GB of PC133 SDRAM.

It also features optional Ultra DMA/100 support for the new fast IDE hard disk drives, has five PCI slots, an AGP slot and an AMR (audio modem riser) slot. The Ultra DMA/100 support is based on a Promise controller chip and this also supports an interesting feature called RAID level 0.

RAID 0 allows two identical hard disks to be written to in parallel, so that one disk is a "mirror" of the other. This means that everything is effectively backed up to a second hard disk

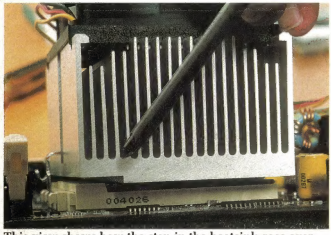

This view shows how the step in the heatsink goes over the step in the socket when it's all locked down. Don't forget to plug the fan lead into the fan connector on the motherboard.

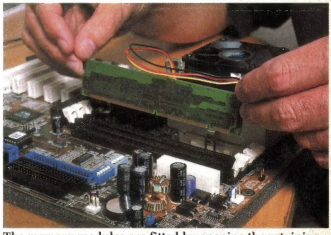

The memory modules are fitted by opening the retaining brackets and pushing the modules down into position. The notches along the contact edge must match the corresponding ridges in the memory sockets.

The heatsink/fan assembly must be orientated so that the step in the base mates with the step in the socket. Place it flat on the CPU and fit one clip to the socket to start with.

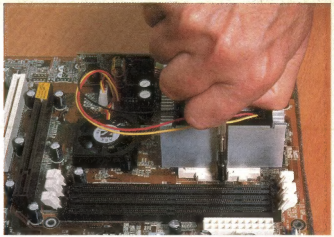

The other clip on the heatsink is pushed down into position using a nutdriver. Don't use a screwdriver – it could easily slip and damage the motherboard.

and this provides redundancy in case one disk fails. You won't want this for a home computer but it is well worthwhile in many business applications.

Another impressive feature of the Asus motherboard is its so-called "JumperFree Mode". When this is selected, the processor speed and voltage (Vcore) settings are automatically detected by the system BIOS, so you don't have to enter in the details yourself – no chances of a mistake here!

Alternatively, if you want to experiment with overclocking, you can enter in custom settings for the bus speed, CPU clock multiplier and CPU Vcore voltage. You don't have to make big jumps in CPU speed either – this board allows the external system front-side bus speed to be tweaked in 1MHz steps (from 90-133MHz) so you can play around to your heart's content to extract that last ounce of performance from the processor.

That said, we don't recommend overclocking unless you are very experienced and know exactly what you are doing. The performance gains are at best marginal and come with increased risk of system instability and processor damage. In particular, playing with the Vcore voltage setting can quickly "fry" the processor.

Disabling the "JumperFree" mode allows you to set the front-side bus and CPU clock multiplier frequencies using on-board DIP switches, in the conventional manner. We're not too sure why you would want to this, however. If you've just paid for some fancy technology, why not take the easy (and safe) way out and let the BIOS do it all for you?

By the way, the CPU frequency is simply the bus frequency multiplied by the clock multiplier. For a 1GHz CPU, a 100MHz bus frequency is used along with a x10 multiplier (ie, 100MHx x 10 = 1000MHz = 1GHz). This means that if you bump the bus frequency up to 101MHz, the processor will run at 101MHz x 10 = 1010MHz.

Of course, you'd have to overclock the processor much more than this before there were any noticeable performance gains. But remember – every notch brings with it the risk of instability and damage.

Other goodies

What about some of the other "goodies" on our list? Well, there's a 20GB Quantum Fireball AS (7200 rpm) hard disk drive, a Mitsubishi DVD-ROM drive, a Prolink GeForce2 MX video card, a Creative SoundBlaster Live sound card and 256MB of memory. And we've specified Windows Me as the operating system.

Windows Me will run with 64MB of memory but we recommend 128MB as the minimum. We went for 256MB because RAM is cheap at the moment and it all helps, especially if you plan to run heavy-duty applications.

The hard disk drive selected is a 7200 rpm Ultra ATA/100 unit which gives excellent performance. In theory, an Ultra ATA/100 drive can transfer data in 100MB/s bursts but don't sweat

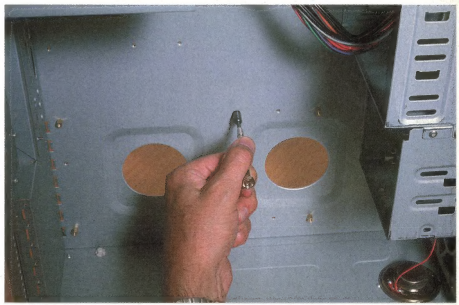

Fit the metal standoffs in the correct locations, so that they match the mounting holes in the motherboard. Take care with this – get one wrong and it could short the motherboard to the case and cause damage.

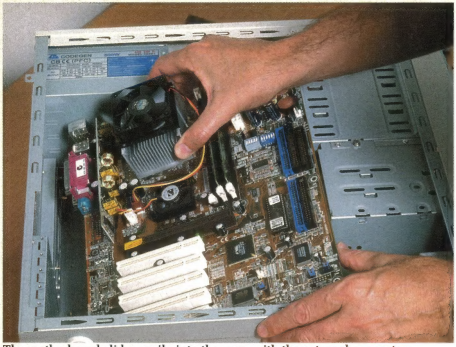

The motherboard slides easily into the case, with the external connectors protruding through matching slots in the back of the case. Make sure it is correctly aligned before fitting the retaining screws.

it if you want to use an existing ATA/66 (or even ATA/33) drive – the motherboard is backwards compatible and the performance differences are not that dramatic.

As for the graphics card, it's based on the all-important nVIDIA GeForce2 MX chip and comes with 32MB of memory. Costing around $215, this is an excellent all-round performer although really serious gamers will always lust after something a lot more expensive – such as a 3D Prophet II GTS Ultra (where to they get those names?) for around $880!

And the rest of the bits? . . . well, they're really just bits. There's a nice 17-inch Philips Model 107S monitor (go for the 107T if you want a flat screen), a Logitech keyboard with lots of bells and whistles, a heatsink/fan assembly for the CPU, an ATX case and various other odds and ends. An IEC power cord and a bag containing screws and metal standoffs were supplied inside the case.

Don't skimp when buying a monitor. A 17-inch model is the recommended standard these days and the Philips 107S fills the bill nicely. We went one better and specified the optional "Multimedia Base" for the monitor. As well as the swivel support, this base includes inbuilt power amplifiers and speakers to remove the clutter from your desktop. It also features headphone and microphone connectors, a bass boost switch and a volume control.

Building it

OK – let's put it together but first the obligatory warning about static electricity.

Just about all the parts that go into a modern PC can be damaged by static electricity, so you must take a few basic precautions to prevent this: (1) leave each part in its protective anti-static bag until it's required; (2) don't touch any of the electronic circuitry; and (3) regularly touch the bare metal case to discharge yourself of static electricity before handling any of the parts.

Our series of photographs pretty much show how it all goes together and it's mostly just a matter of checking the manuals and using your common sense.

The first thing to do is to inspect the jumper settings on the Asus motherboard. The default settings are the ones to go for and this includes leaving the unit in "JumperFree" mode – unless you particularly want to manually set the processor speed using the on-board DIP switches. This done, you can follow these steps to complete the assembly.

STEP 1: INSTALL THE CPU & FAN/HEATSINK ASSEMBLY

To install these parts, first lay the motherboard flat on the table on top of its antistatic packaging foam. This done, move the handle of the processor socket to the vertical position, insert the CPU and push the handle down again to lock it into place.

The processor only fits one way

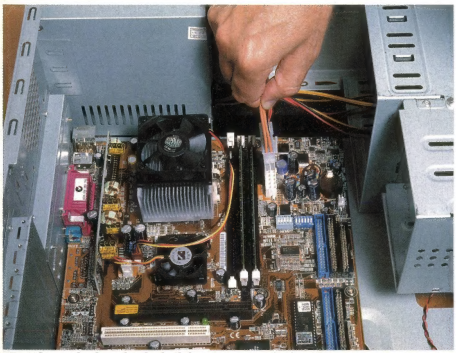

Once the motherboard is locked down, you can fit the ATX power connector to its matching socket. It only goes one way around due to the rounded corner at one end of the socket.

The plastic dress cover on the front of the floppy drive had to be removed before fitting the drive to the Adelong ATX tower case that we used. The cover simply clips off.

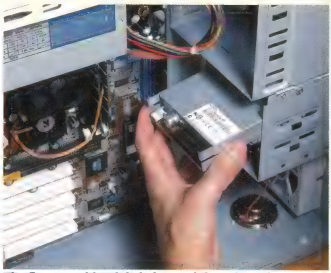

The floppy and hard disk drives slide in from the rear. The floppy drive release button should just make contact with the pushbutton switch on the front of the case.

(there are blank pin positions in two of the corners) and you must make sure that it is properly seated in its socket before locking it down.

The heatsink fan assembly can now be fitted to the processor. This bit is important – there is a step in the bottom of the heatsink. This step must go over the a corresponding raised step at the back of the socket.

Once you've determined the heatsink orientation, peel the protective strip off the thermal contact pad, then position it close to the CPU and push one of the locking brace clips (ie, the one without the hook) over its matching socket spigot. The heatsink can then be carefully seated on the CPU and the retaining clip (with the hook) at the other end pushed down and clipped into place.

A nutdriver is the best tool to use to push this retaining clip into position. Do not use a screwdriver – one slip and the motherboard is cactus (and you won't get warranty).

The next step is critical – plug the 3-pin lead from the heatsink/fan assembly into the CPU/FAN connector on the motherboard.

STEP 2: FIT THE MEMORY MODULES

The two 128MB memory modules go in next. These only fit one way and are orientated so that the notches along the contact edge match corresponding ridges in the memory sockets.

Installing a memory module is simply a matter of opening the white retaining arms, then firmly pushing the module down into the socket until the arms snap back into position.

STEP 3: FIT THE MOTHERBOARD INTO THE CASE

Before actually fitting the motherboard, you have to fit the standoffs into position. Our case came with metal standoffs but you may be supplied mainly with plastic standoffs and a couple of metal standoffs which are usually fitted to two central positions near the rear of the case.

Assuming the use of metal standoffs, these should all be installed on the motherboard panel using a nutdriver. If necessary, do a trial fit of the motherboard to determine which locations are used for the standoffs.

Don't overtighten the standoffs – you'll strip the threads if you do.

Once the standoffs are all secured, lower the motherboard into position. Make sure that all the mounting holes

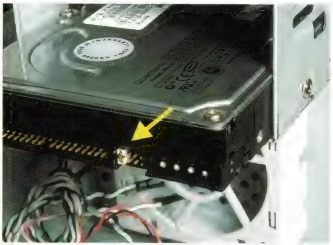

Check the jumper setting on the back of the hard disk drive before installing it in the drive bay. The jumper settings are shown on a label.

The DVD-ROM drive slides in from the front of the case. Be sure to set the jumper to the correct position on the back of this drive as well, before fitting it to the case.

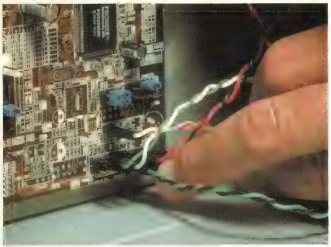

The panel connector leads go to the pin headers on the bottom righthand corner of the mother board. The lead connectors are clearly marked, so they're easy to identify.

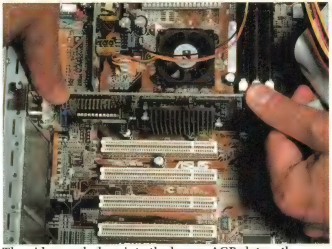

The video card plugs into the brown AGP slot on the motherboard and is secured to the backplane bracket. Make sure it is properly seated in its slot.

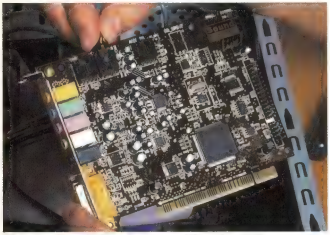

The sound card plugs into one of the white PCI expansion slots. It is a good idea to fit the audio cable from the CD-ROM drive first, to make the job easier.

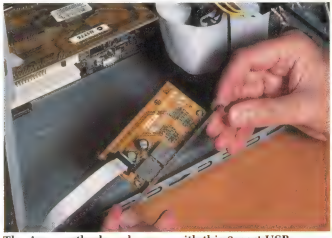

The Asus motherboard comes with this 2-port USB expansion card. It attaches to a backplane bracket and connects to a USB header on the motherboard.

line up correctly, then secure the board using the supplied retaining screws.

STEP 4: INSTALL THE DISK DRIVES

With the motherboard secured, you can slide the floppy disk and hard disk drives into the case.

The case we used came with a moulded opening for the floppy disk drive, complete with release button. This necessitated removing the plastic dress cover on the front of the floppy drive (it just clips off), so that it could be pushed far enough forward in the drive cage. It was also necessary to remove the breakaway metal barrier at the end of the drive cage.

Secure this drive using the screws supplied with the case.

Now check the jumper setting on the back of the hard disk drive. Make sure that's it's correctly set for a single drive – the settings will be shown on the drive label and, if it's a new drive, the default setting is usually correct.

However, if you intend using two hard disk drives on the same IDE port, the boot drive is set as a master and the other drive is configured as a slave. On some drives, the master and single drive (DS) settings are the same; on others, they're different – look at the drive label.

Assuming that the jumper setting is correct, slide the hard disk drive into the bottom of the drive cage and again secure it using the screws supplied.

Unlike the other two drives, the DVD-ROM drive slides in from the front. It must be mounted fairly high up (using either of the top two bays), otherwise the motherboard prevents it from being pushed all the way home. Be sure to check its jumper setting at the back – this should be set to master since the DVD-ROM connects to a separate IDE port. If you later decide to add a ZIP drive to the same port, the DVD-ROM drive can be left as is and the ZIP drive configured as a slave.

An unusual feature of our case was the inclusion of metal breakaway barriers directly behind the plastic panels covering the drive bays. It's probably a good idea to remove all these, so that they don't come adrift later on and short something out.

STEP 5: CONNECT THE PANEL LEADS

By now, you will be well aware of the twisted lead pairs that have been "flapping" about inside the case. These run off to the front panel switches and LEDs and to the internal speaker, and must be connected to the header pin panel in the bottom righthand corner of the motherboard.

You will need to refer to the motherboard manual to find out which lead

goes where. It's easy to identify the leads themselves, since the lead connectors are all clearly marked. Note that, depending on your case, some of the options will not be used (eg, we didn't use the "Message LED" and "Suspend" options that are on this particular motherboard).

STEP 6: CONNECT THE POWER & DRIVE CABLES

It's hard to make a mistake when plugging in the drive cables – just remember that for CD-ROM drives and hard disk drives, pin 1 (the red coloured lead) is always closest to the power connector.

The hard disk drive should be connected to the primary ATA/100 connector on the motherboard, while the DVD-ROM drive is connected to the primary IDE port. This bit is important: in each case, you must plug the blue connector at the end of the ATA/100 (80-conductor) drive cables into the motherboard. The black connector at the far end of the cable then goes to the drive.

Don't use the grey connector in the middle of the drive cable and leave the one at the far end free. When playing around with Ultra ATA/100 stuff, it's best not to have an unterminated "stub" at the end of the cable. The only time you use the middle connector is when you have two drives connected to the same port (one as a master, the other as a slave).

In case you're wondering, the 80-conductor cables work fine with older disk drives (both hard disk and CD-ROM). However, don't use the older 40-conductor cables for Ultra DMA/666/100 connections, as they will cause problems.

Take care when connecting the cable to the floppy disk drive – its red lead faces in the opposite direction to the hard disk and DVD-ROM drive cables (ie, it goes to the left when looking at the drive from the rear). You must also use the connector that's at the very end of the cable to make the connection (the middle connector is used only if you have two floppy drives, which is rare these days).

The power connectors can now be plugged into the motherboard and disk drives. You can't plug them in the wrong way around, since they only go in one way due to the shape of the socket. The trick with any of this stuff is don't force it.

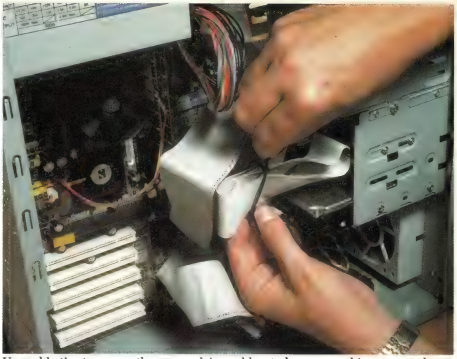

Use cable ties to secure the excess drive cables, to keep everything neat and tidy. This also ensures that the drive cable cannot possibly foul the fan and prevent it from working properly.

It's a good idea to use cable ties to secure the drive cables, power cables and the twisted pair leads, to keep everything looking neat and tidy. It also helps reliability, since it prevents leads from coming adrift.

STEP 7: INSTALL THE VIDEO & SOUND CARDS

We don't really have to tell you how to do this. The video card plugs into the AGP slot (that's the brown connector), while the sound card plugs into one of the white PCI slots. It will be necessary to remove the relevant breakaway metal backplane strips before installing the cards.

Note that you have to connect an audio cable between the DVD-ROM drive and the "CD IN" socket of the sound card (cables will be supplied with both units, so you will have one spare). It will be easier to connect this cable before installing the sound card in its slot.

Once again, use a couple of cable ties to tidy up the excess lead length.

STEP 8: INSTALL THE 2-PORT USB BOARD

The Asus motherboard includes two on-board USB ports plus an additional USB header. This header connects to a small PC board fitted with two more USB connectors and this assembly is attached to a backplane bracket.

It's up to you whether you install this "2-Port USB Connector Set" or not. If you think that you're going to need more than two USB ports, simply mount the connector set bracket in a vacant backplane position and run the cable from it back to the USB header on the motherboard.

Delayed switch-on

OK, the machine is finished. We're not going to switch it on and install the operating system just yet though. That will have to wait until next month. In the meantime, you can buy the bits and get started. **SC**

WHERE TO BUY THE PARTS

All the parts used in this computer system came from Adelong Computers, 54 Rosebery Ave, Rosebery, NSW 2018; phone (02) 8344 3190. Their website address is *www.adelong.com.au*; email *info@adelong.com.au*

Normally, this system would cost $2640 but for this month only Adelong is prepared to reduce the price to $2450.

Alternatively, you can buy the system fully built and configured for $2499 with a 3-year onsite warranty.

Part 3 in our UAV series

By BOB YOUNG

UAVs:

Weird, Wonderful & even Web-based

While the arrival of the monster UAV Global Hawk in Australia during April may have been big news, there are a host of other smaller UAVs, some with quite remarkable capabilities. Ultimately, they may largely replace piloted aircraft for surveillance and warfare!

After the record-breaking trans-Pacific flight of Global Hawk to Australia in April, it is safe to say that Unmanned Aerial Vehicles (UAVs) – pilotless, fully autonomous aircraft – have finally come of age.

However Global Hawk is not the only advanced UAV plying the skyways; there are a host of others, as we shall see.

In fact, it is becoming increasingly difficult to discern the divide between UAVs and normal aircraft that have a fully autonomous capability. Manned aircraft fitted with such items as autopilots, terrain following, inertial navigation, GPS navigation and autoland systems are blurring the definition of what comprises an autonomous aircraft.

A UAV Ground Control Station (GCS).

Here we come smack up against the prime 21st century aviation debate! Is the pilot simply going along to make the passengers feel comfortable or perhaps even to satisfy some primeval need for humans to feel needed? If so, at what point might the pilot be removed?

At the end of this trail is the Holy Grail of the UAV dreamer, the UCAV which is the Unmanned Combat Air Vehicle. With the UCAV, all arguments come to an end, at least at a philosophical level, for few would now disagree that sending a pilot into an increasingly lethal hi-tech battle zone

is becoming a dubious concept indeed.

However, the UCAV is well into the future, awaiting further developments in artificial intelligence (AI) and interference-free command and control (C2) systems. For the moment, such tactics as sending in swarms of drone decoys, simple UAVs, cruise missiles and aircraft fitted with anti-radiation missiles to clear the way for the manned combat aircraft have to suffice. During Desert Storm, for example, in some instances it took up to 32 manned aircraft to clear the way for a single precision ground attack mission.

Therefore it is obvious that there are vast cost savings to be made with the UCAV but there are some serious political issues which must be resolved before that. The authorisation of "weapons release", for some strange reason, is one of them. We already see cruise missiles delivering warheads to remote targets and UAVs fitted with some small weapons, so it is difficult to understand why the UCAV debate should focus so much attention upon weapons release.

In the meantime, we are witnessing the movement of unmanned aircraft into an ever-expanding zone of operations while manned aircraft are becoming more autonomous.

The question to be resolved is at what point do the two meld into one, if ever?

Having said all of that, the May 2001 issue of SILICON CHIP gave a detailed overview of the support systems required for Global Hawk. Even a cursory glance, at the command and control systems as well as the data collection and processing hardware, reveals a system of staggering complexity in which the crew have effectively been removed from the aircraft and placed on the ground (out of harm's way).

Not all UAVs have to be unmanned! This one, the General Atomics Pelican OPV, can be operated in manned or unmanned mode (hence the cockpit and windows!)

To move the support equipment around the world requires two Hercules aircraft. Where then is the saving? This is the nub of the manned/unmanned aircraft debate. But China's recent downing of the American Orion P3C surveillance plane brings this debate into sharp focus. It also recalls the degrading spectacle of Gary Powers being paraded on the world stage (the U2 pilot shot down over Russia in the 1960s).

Clearly, Global Hawk offers a well-defined and clear-cut solution to an age-old problem: a low altitude (as compared to a satellite) surveillance system relatively free of political risk. In the event of a mishap, the remains become just a pile of junk, with little or no emotional baggage for people to become excited about; just another dead robot. It is no accident that Global Hawk is being touted as a replace-

General Atomics' Prowler II, a tactical UAV which can stay aloft for 18 hours, operating at 20,000 feet. It has a 7.31m wing span, 4.24m fuselage and can operate from semi-prepared surfaces. Note the rear-mounted "pusher" motor.

The GA Predator being readied for takeoff. A good idea of the aircraft's size can be gained by scaling it against the service personnel attending it (the person at the back is standing on stairs!).

ment for the U2 type of aircraft.

In the meantime, let's have a look at a few current developments.

General Atomics

General Atomics Aeronautical Systems are manufacturers of a wide range of high performance UAVs designed primarily for military and research purposes. All are designed to use a common ground station mounted on a small truck and trailer that can be driven onto a C-130 Hercules.

GA–Prowler II

The GA Prowler II is a small (7.31m wingspan), highly capable UAV designed primarily for the US military. It features a single 47kW Rotax 582 engine mounted at the rear of the fuselage in a pusher configuration. This layout is common to all General Atomics UAVs and is dictated primarily by the need for keeping the nose of the aircraft free for sensors.

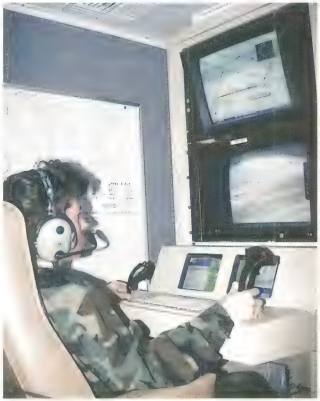

Pilot's-eye view of the controls of a typical UAV – except that the pilot may be thousands of kilometres away from the aircraft and in fact does very little "flying" – that's all done by computers. This is the General Atomics Ground Control Station, or GCS.

The pusher layout is also responsible for the unusual tailplane and fin arrangements on GA aircraft, to avoid the risk of the prop striking the ground during takeoffs and landings.

Prowler's wingspan is 7.31m and the fuselage length is 4.24m. Maximum takeoff weight is 340kg with 90.6kg of fuel and 45.3kg of payload. Dash speed is 230 knots and endurance is 18 hours. Maximum altitude is 20,000 feet. Sensors include EO/IR (Electro-optical/infrared) and SAR (Synthetic Aperture Radar) systems and the LOS (line of sight) data link range is 200km.

It is interesting to note in the Prowler sales brochure the following paragraph under the heading, "Endurance is the key: Long on-station times provide mission flexibility because fewer aircraft are required to do the job. Reducing the number of takeoffs and landings translates to lower loss rates and reduced support personnel requirements...".

This highlights a very important problem in UAV operations. Takeoffs and landings during manned flight represent a major source of potential danger but in unmanned operations they assume a much greater hazard, as the problems of lining up on the runway when the pilot is not in the aircraft are considerable.

Traditionally an "inside pilot" is used to control the aircraft in flight and an "outside pilot" is used to handle the takeoffs and landings. The US military is fed up to the back teeth with the concept of the outside pilot hence the drive for automatic landing and takeoff systems.

The Altus is designed specifically for high altitude scientific research and commercial operations. It is used by NASA, the US Dept of Energy and the US Navy.

According to legend, one Jindivik crew was nicknamed "Snow White and the Seven Dwarfs" because they used to go everywhere (even into the mess) in a single file in order of importance in the flight operation. There was Snow White in the lead, the flight commander, who stayed inside, followed by various other pilots who operated either inside or outside.

These included an outside pilot who handled the elevators on the landing and another outside pilot stationed at the end of the runway to handle the rudder and keep the aircraft centred on the runway. As amusing as the story may be, it does indicate the degree of difficulty in operating an aircraft remotely.

These days the Americans use a single outside pilot to control the aircraft through a console which looks much like a heavy duty model aircraft transmitter. This is mounted on a stand and connected to the main control van via a long cable. The sight of this fellow standing alongside one end of the runway while a large high-speed aircraft zooms in for a landing raises the hairs on the back of the neck of experienced R/C fliers, let me tell you.

One needs very little imagination to see why the General Atomics people state that takeoffs and landings should be kept to a minimum.

General Atomics I-GNAT

This is a well-proven UAV in service with several military forces and with seven combat deployments under its belt.

The new-model GA Predator B majestically soaring up around 65,000 feet – not too far from the edges of space. The most obvious difference between original and new Predators is the dihedral tailplane on the Predator B. It's also bigger.

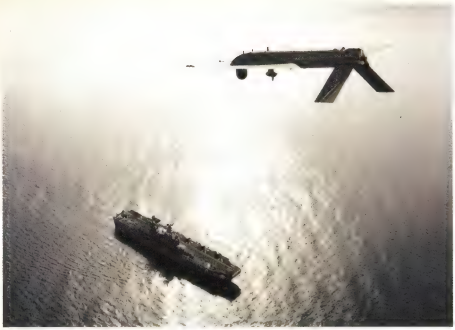

I spy with my little eye . . . oh, it's friendly. A GA "IGNAT" UAV above the USS Tarawa.

With its characteristic "upside down" tailplane assembly, it is shown in the opening photo of this feature.

Composed mainly of carbon epoxy composites and tested to 6G, the I-Gnat has a wingspan of 12.8m and length of 5.75m. Gross takeoff weight is 703kg and speed is 125 knots. Endurance is more than 40 hours and maximum altitude is 25,000ft. The engine is an 80hp Rotax 912 with the option of a 105hp Rotax 914.

GA–Altus

Another of the General Atomics family but this time designed specifically for high-altitude scientific research and commercial operations. Currently it is used by NASA, the US Dept of Energy and the US Navy. Altus is quite a large (16.76m wingspan, 6.71m length) and very capable UAV. Available with a variety of engine options it is capable of operating up to 65,000ft. Takeoff weight is 974kg with a payload capacity of 148.5kg.

GA–Predator B

This is is the big brother of the RQ-1 Predator and features a 19.5m wingspan against the 14.62m span of the original Predator. The B version is also fitted with an Allied Signal 331-10 gas turbine engine. Predator B has a gross takeoff weight of 2730kg and a speed of 210 knots. Endurance has suffered somewhat in the quest for speed, with a figure of 25 hours against the 40-hour endurance of the RQ-1 Predator with its lower airspeed of 118 knots.

Payload is quoted as 295.5kg and ceiling as 45,000ft. Sensors carried include a SAR with 4-inch resolution, ESM and radio relay and an improved optical package that can view personnel at ranges of up to 50 nautical miles. All of the modern UAVs can carry sensor packages of outstanding resolution and performance and it is the improvement in the entire array of airborne electronic systems that has contributed so much to the success of the modern UAV.

Altair

The latest and one of the largest of the Aeronautical Systems UAVs, the Altair is designed with the scientific and commercial communities in mind. Capable of carrying a 400kg payload to 40,000ft and beyond and staying aloft for 32 hours at a stretch, the Altair is a very capable UAV indeed.

Wingspan is 19.5m in the standard configuration, with an extended wing of 25.6m available as an option. Length is 11m and gross takeoff weight is 3182kg. Maximum cruising speed is 151 knots. The engine is a 700hp TPE331-10 turboprop.

The fault-tolerant avionics include ATC (Air Traffic Control) voice relay, Mode 3C transponder, NASA FTS, INS (Inertial Navigation System) and GPS (Global Positioning System). The data links use C-band for line of sight and Ku-SATCOM for over-the-horizon. Navigation may be remotely piloted or fully autonomous.

All of these aircraft represent a major leap forward in UAV technology over the past few years and while not in the same class as the Global Hawk, they are quite potent performers in their own right.

Northrop Fire Scout

A conventional helicopter of some size, the Northrop Grumman Fire Scout is designed primarily for shipboard operations where launch and recovery present serious problems, especially in rough seas. Fitted with an auto take-off and landing system, the Fire Scout can operate from any aviation-capable warship and from unprepared landing zones.

Length is 6.97m, rotor diameter 8.38m, height 2.87m and gross weight is 1157kg. Maximum speed is 125

Northrop Grumman's "Fire Scout", designed primarily for fully automated takeoff and landings aboard ships. Launch and recovery of conventional (manned) helicopters often present serious problems, especially in rough seas.

Bombardier Aeropsace's CL-237 Guardian UAV. It has contra-rotating blades and is designed for perch-and-stare operation from ships and other limited-space locations. It's also suitable for rough terrain work.

knots; service ceiling is 6100m with an endurance of greater than 6 hours. The usual combat radius is 200km with a 4-hour loiter at the target.

CL-327 Guardian

Here we have the one of the strangest of all UAVs. It is designed to overcome the problems associated with shipboard operation, where recovery in rough seas on restricted deck space presents almost insurmountable problems.

Looking for all the world like a flying hour-glass, it is essentially a helicopter with twin, contra-rotating rotors located at the waist of the hour-glass shaped fuselage, body shell or whatever you may like to call it. This vehicle is so strange-looking that it steps outside of the boundaries of normal aviation terminology.

Manufactured by Bombardier Aerospace in Canada, the Guardian is integrated into the UCARS automatic landing system and thus provides a VTOL system capable of fully automatic take-off and recovery. A unique feature is the landing grid that locks the vehicle onto the deck when touchdown is made, thereby eliminating any bounce due to rough seas. The system can also operate from rough, uncleared terrain using the same grid.

Rotor diameter is 4m and gross take-off weight is 350kg. Speed is a maximum of 85 knots and endurance is 6.25 hours. Range is 100-200km, depending upon the payload carried and the time on station. Height is 1.84m and fuel capacity is 180 litres total, carried in two tanks.

Web-controlled UAV

The above UAVs are all very useful for the professional soldier and professional scientist but what can UAVs offer to the average Joe or Jill?

How about being able to log onto the net and take control of your own personal UAV for an hour or so? Then steer your UAV around Uluru or the Daintree, soaking up the sights in the

Wanna fly a UAV? Hook into www.observatine.net and you may get the chance to do just that! The man in the fashion-statement-blue outfit is none other than our own Bob Young. Yes, he does exist!

It might look like a model helicopter to you but it's another web-based UAV complete with video camera (in green).

Observatine's web-based UAV which you will be able to fly from the comfort of your own PC. It's something like Flight Simulator without the simulation – it's real!

comfort and safety of your own lounge room, with adequate stocks of tinnies and chips to hand.

Sound a bit far fetched? Not if Zina Kaye of Observatine, an innovative Sydney based company has her way. To join the Observatine team, log on to ***www.observatine.net*** and be prepared for a new experience. The web will never be the same again.

Observatine is a pod and boom pusher aircraft of 3-metre wing span and 2.6m length. Fitted with a Zenoah 74cc horizontal twin engine, autopilot, GPS nav, data uplink/down link and most important of all, a video link, here is a tiny package that packs a mighty punch. Weighing in at 25kg gross takeoff weight, Observatine carries a 7kg avionics payload.

This aircraft is a flying machine that gives a viewer the experience and control of flying, while having a bird's eye view of the land. Since Observatine is managed by a web-server configuration, web-based viewers may be pilots and viewers. This project was realised initially in Australia and relies on ongoing support from programmers in The Netherlands, Germany, the UK and Poland.

To sum up Observatine, here are a few words from Zina Kaye, *"Flight, in the context of entertainment, refers to the desire for movement, speed and travel. Games, such as Microsoft Flight simulator, offer the user an interface that employs metaphors of control, but that can only follow the action.*

Observatine wishes the user to be carried away by offering the viewer the chance to pilot a real flying object. Observatine is a model aeroplane with on-board system that gives a viewer on a web-site the control of the aircraft and a bird's eye view of the land. The aeroplane is situated and certified in Sydney but it is intended that the choice of radio frequencies will permit it to be flown also in Europe & USA".

So there you have it, a UAV for couch potatoes. One can only imagine how some people may wish to employ it.

We live in exciting times. **SC**

Make the Move to Surface Mount!

For Sale

Pre-loved Surface Mount Machine

Mamiya Superhand ECM 85 MKII

* Price includes 1 weeks training!

* UP TO 2000 PARTS PER HOUR
* 2 HEADS
* 48 FEEDERS TOTAL - 36 X 8mm, 6 X 12mm, 4 X 16mm, 1 X 25mm TAPE FEEDER, 1 X VIBRATORY STICK FEEDER
* HANDLES SIZES 0603, 0805 & 1206
* MADE IN JAPAN
* ALL MANUALS INCLUDED

Dimensions	1120(d) x 700(w) x 1350(h)
Weight	150kg
Pneumatic Pressure	5.5kg/cm^2 (dry air)
Repeater Ability	+/- 0.03
Placement Angles	0°, 90°, 180°, 270°
Placement Speed	1.8sec/item
Placement Accuracy	+/- 0.2
Programmable Memory	1000 items
Data Input	Interactive MDI
Max Board Size	250mm x 330mm

CONTACT:
FRANK FERRARA
Phone: (02) 4577 4708
Fax: (02) 4577 4885
frank@rhinosecurity.com.au

$32,000 ono

2 pairs TO BE WON!

WIN

TWO OF THESE UNIDEN MINI TWO-WAY RADIOS

courtesy

DICK SMITH ELECTRONICS

For more info on these transceivers refer to SILICON CHIP March 2001

Back in the March 2001 issue of SILICON CHIP we reviewed several UHF CBs – and gave the tiny Uniden UH-040XR our "best buy". Obviously Dick Smith Electronics liked what we said because to celebrate their CD-ROM catalog release (see this month's front cover) they've sent us four transceivers – two pairs – to give away to SILICON CHIP readers.

They're valued at $99 each so the two prizes are worth $198.00 each.

All you have to do to win a pair of Unidens is to tell us, in no more than 50 words, what use you would put them to.

The two cleverest, perhaps offbeat, or maybe most deserving applications (in the humble opinion of SILICON CHIP staff!) will each win a pair.

Note: chance plays no part in determining the winners. Entries close 30 June 2001. Winners will be announced in the August issue.

Entries will only be accepted on this form or a photocopy thereof.

Name: .....

Address: .....

..... Postcode: .....

Daytime phone no: (.....) ..... Email: .....

Here's what I would do with a pair of Uniden UH-040XR CB transceivers (fifty words or less):

.....

.....

.....

.....

Mail your entry to: Uniden Two-Way Giveaway, Silicon Chip Publications, PO Box 139, Collaroy NSW 2097.

DICK SMITH ELECTRONICS

Where do you go for the latest new releases?

Wallplate Audio/Video 2 x RCA

Features 2 x RCA Sockets to suit Audio/Video connections around the house.

P 1770

$7.97

Wallplate Audio/Video 4 x RCA

Features 4 x RCA Sockets for more connection points.

P 1772

$9.97

New

Servo Motor with Horns and Accessories

Ideal replacement in RC models or for use in robotics.

P 9061

$29.89

New

Digital Callipers

Feature a 4 Digit LCD, internal/external measuring jaw, depth measuring blade, metric/imperial conversion, and zero setting.

Q 1381

$49.55

Temperature Controlled Solder Station

A solidly built soldering station with a compact 48W soldering pencil, adjustable temperature selection, and temperature metering.

T 2200

$178

Apple Night Vision

New

NightOwl Night Viewer

Night vision is digitally enhanced so you are not actually viewing the scene before you but a video image of the scene.

Features 7000X light amplification.

3.6X magnification, weighs 585g, 12° field of view.

Viewing distances - In moonlight up to 200m, in Starlight up to 150m and in absolute darkness 100m. Comes complete with a soft carry case, 2 x 'AA' batteries and an infrared LED illuminator. 1 Year Replacement Warranty.

L 8182

AVAILABLE POWER HOUSE AND dse.com.au/link ONLY

$598

New

Anti-Theft Electronic Safe

An affordable anti theft safe, that can be programmed with any 3 to 8 digit code. Includes backup battery and manual override key system, mounting bolts and instruction manual. Requires 4 x 'D' size batteries (supplied).

Size: 340 x 200 x 240mm. Weight: 18kgs. Door Thickness: 6mm.

Body Thickness: 3mm. NOTE: This safe is NOT fire resistant.

L 8600

AVAILABLE POWER HOUSE AND dse.com.au/link ONLY

$147

Alpen 8x42 Wide Angle, Long Eye Relief Binocular

The Alpen Pro Series combines the best in durable design, superior optical performance and unique comfort for the most serious binocular user.

Alpen Pro Series binoculars set a new benchmark for quality, value and performance which can only be experienced to be believed.

• Multi-Coated Lens for the brightest view • Unique Grip design for extra holding power and comfort • Extra wide premium quality neckstrap • Soft rubber rain guard • Fold down rubber eyecups • Durable carrying case • Lens cleaning cloth

Specifications:

- Magnification: 8X
- Objective Lens Diameter: 42mm
- Focus System: Center
- Prism Type: Porro
- Field Of View @ 1000 Yards: 430ft
- Exit Pupil: 5.2mm
- Eye Relief: 19mm
- Lens Coating: Multi-Coated
- Unit Weight: 27oz
- Rain Guard: Rubber
- Neck Strap: Premium Quality
- Tripod Adaptable: Yes

L 8240

$248

AVAILABLE POWER HOUSE AND dse.com.au/link ONLY

New

Alpen 10x50 Wide Angle, Long Eye Relief Binocular

The Alpen Pro Series combines the best in durable design, superior optical performance and unique comfort for the most serious binocular user.

Alpen Pro Series binoculars set a new benchmark for quality, value and performance which can only be experienced to be believed.

• Multi-Coated Lens for the brightest view • Unique Grip design for extra holding power and comfort • Extra wide premium quality neckstrap • Soft rubber rain guard • Fold down rubber eyecups • Durable carrying case • Lens cleaning cloth

Specifications:

- Magnification: 10X
- Objective Lens Diameter: 50mm
- Focus System: Center
- Prism Type: Porro
- Field Of View @ 1000 Yards: 342ft
- Exit Pupil: 5mm
- Eye Relief: 16mm
- Lens Coating: Multi-Coated
- Unit Weight: 29oz
- Rain Guard: Rubber
- Neck Strap: Premium Quality
- Tripod Adaptable: Yes

L 8241

$268

AVAILABLE POWER HOUSE AND dse.com.au/link ONLY

New

DICK SMITH ELECTRONICS

That's where you go!

www.dse.com.au

Where do you go for the hottest kits around?

DICK SMITH ELECTRONICS

CLEARANCE

LIMITED STOCK

SAVE $12.80

Lemon Clock Kit

Shows you how to assemble a digital clock utilising electricity produced by fruit, vegetables and household cleaning materials.

K 1031

$12.80*

CLEARANCE

velleman kit — Only 20 units available *LIMITED STOCK*

Multi-Function Clock Kit

Time, date, and temperature indication selectable via a toggle option. Easy-to-read 6x36mm high digits. Features a scoreboard function for two players or teams that counts up to 199, a chime beep option, a relay output for temperature control or time alarm, and US or Europe display option for time, date, °C or °F format.

K 1311

$79*

AVAILABLE Power House AND direct link ONLY

CLEARANCE

LIMITED STOCK

Velleman Light Organ Mini Kit

Make lamps flash to the rhythm of music. Features an optically isolated speaker input and adjustable sensitivity. Kit is supplied with all required components. Some soldering experience is required.

K 1333

$5* SAVE $16.89

BELOW COST!

Motorised Drive System Kit

Provides different size pulleys which enables you to learn about and build a pulley driven system. Powered by 2 x "AA" batteries (not included).

K 1255

$10 SAVE $9.80

HOT CHIP Mini Board

Extension board for the HOT CHIP microprocessor kits. Includes 8kB programmable flash memory, 2x8bit timer/counter, 1x16bit timer/counter, and programmable UART. Chip and board only.

K 1431

$39 SAVE $30

Mains Monitor Kit

Great for rural areas or where appliances need to be protected against mains fluctuations. If the voltage falls outside a pre-set range, power is switched off. Kit includes punched, screened front panel, case and all components.

K 7207

Ex. Jun '99

$49.75 SAVE $50

Christmas in July parties!

Velleman Riding Santa Mini Kit

The Christmas spirit comes alive with this colourful riding Santa mini kit, which features 126 multi-coloured LEDs. Supplied with all required components.

K 1321

$16.60 SAVE $16

velleman kit

Velleman Xmas Tree Mini Kit

Make your own Christmas tree with a tree-shaped PCB and flashing LEDs. Supplied with pre-cut circuit board, flashing LEDs, and required components.

K 1309

$7.80 SAVE $7

velleman kit

Velleman Deluxe Xmas Tree Mini Kit

This colourful Christmas tree consists of 134 LEDs, with 18 of these LEDs acting as randomly blinking candles. Supplied with pre-cut circuit board and all components.

K 1335

$14 SAVE $18.60

velleman kit

Velleman Animated Bell Mini Kit

This colourful animated bell consists of 83 LEDs. Kit is supplied with all required components. Power source required: 9- 12-volt DC adaptor or 9 Volt alkaline battery (not included).

K 1330

$9.88 SAVE $9

velleman kit

direct link — Direct Link is equipped with the service centre to supply you with a hassle free delivery direct to your door. **PHONE 1300 366 644** to place your order.

Availability: Our kits consist of many different parts from numerous suppliers. Whilst we have consulted closely with them and are satisfied as to their ability to supply, sometimes problems can arise in obtaining all of the parts. This means there is a slight chance that availability may be delayed. Rainchecks are available, however if you'd like to check beforehand, please don't hesitate to contact your local store. Offers expire 30/6/2001.

***Limited stock** All stocks marked clearance, limited or with an '*' may not be available in all stores or via Direct Link. Rainchecks do not apply. Offers valid for the calendar month of June 2001.

DICK SMITH ELECTRONICS *That's where you go!*

DICK SMITH ELECTRONICS

Where do you go for great savings?

Instrument Cases

Quality Australian-made K & W instrument cases. With a steel top, cover, plus aluminium base/front/rear.

SAVE 50%

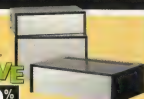

Size: 77(L) x 255(W) x 155(H)mm	H 2808	$16.70 SAVE 50%
Size: 150(L) x 255(W) x 155(H)mm	H 2810	$19.45 SAVE 50%
Size: 90(L) x 305(W) x 200(H)mm	H 2812	$21 SAVE 50%

Steel Enclosure Series "A"

Packs flat for easy storage and shipping and features easy-to-modify aluminium front and rear panels.

Size: 203.2 x 63.5 x 177.8mm

H 3100

$18.38 SAVE 50%

CLEARANCE

LIMITED STOCK

Analogue Sound Level Meter

Measure noise levels in factories, schools and offices or check the acoustics of studios and auditoriums. 60dB to 120dB range.

Q 1361

$49* SAVE $82

Solenoid DC 6V 916mA-12V 1.8A

Great for hobbyists and experimenters. Make your own electrically operated doorigate lock. Size: 47.5 (L) x 29 (W) x 26.4 (H).

P 9010

$12.50 SAVE 35%

THIS MONTH ONLY

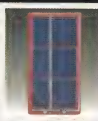

Solar Module 1.0V 250mA

O 2013

$4.23 SAVE $4

Super Solar Regulator 20A 12V

Maintains batteries in high state of charge and protects them against over charging.

O 3121

$39.80 SAVE $30

XENON Flash Tube 30mm

Straight tube for low energy, high flash rate uses such as stroboscopic timing lights and beacons.

P 8166

$3.55 SAVE 40%

THIS MONTH ONLY

Solar Module 1.5V 500mA

O 2015

$9.21 SAVE $7

Keychain Miniature Laser Pointer

With 1mW power, it's ideal for product demonstrations, lectures and training sessions. Includes batteries.

T 2903

$19.93 SAVE $10

CLEARANCE

LIMITED STOCK

Air speed and temperature meter

With digital temperature display in °C or °F, wind speed in metres/second or feet/minute. Ideal for boating, sports & air conditioning installers.

Q 1411

$123* SAVE $75

CLEARANCE

LIMITED STOCK

Electric Fence Volt Tester

Gives a clear indication of the fence line voltage. The unit has four ranges starting from 1500V to 6000 Volts. No battery required.

Q 1230

$10* BELOW COST!

CLEARANCE

LIMITED STOCK

AF Signal Generator

Essential tool for working on many circuits, with a wide 10Hz to 1MHz output and high accuracy.

Q 1310

$168* SAVE $75

AVAILABLE Power House AND direct link ONLY

PHONE, FAX OR VISIT ANY OF OUR STORES TO RECEIVE A FREE COPY OF OUR NEW DICK SMITH ELECTRONICS 2001 CATALOGUE

Please fax or phone or bring this coupon into any of our stores.

ONE FREE CATALOGUE

Name.....

Address.....

direct link Direct Link is equipped with the service centre to supply you with a hassle free delivery.

PHONE: 1300 366 644 (Local Call Charge) **FAX:** (02) 9642 1155

***Limited stock** All stocks marked clearance, limited or with an '*' may not be available in all stores or via Direct Link. Rainchecks do not apply. Offers valid for the calendar month of June 2001.*

DICK SMITH ELECTRONICS *That's where you go!*

www.dse.com.au

Where do you go for the hottest prices?

DICK SMITH ELECTRONICS

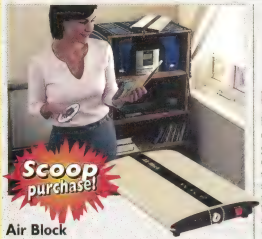

Air Block Alarm System *LIMITED STOCK*

A totally portable, volumetric alarm working on air pressure changes. Amazing versatility makes it ideal for protecting anything from homes to cars, caravans to offices. Requires six 'AA' batteries (not included).

L 5740

HOT PRICE! $68*

Mini PIR Detector

12 x 12m at 90° range. Single-shot or pulse count selectable. With dual element pyro-electric sensor, radio frequency interference filter and tamper contacts. Size: 55 x 31 x 73mm.

L 5018

$24.67 SAVE $20

Ness Quantum Dual PIR Detector

15 x 15m (wide angle) range. Features a combined microwave and dual element PIR detector, tamper output and alarm relay output. The PIR zones have 20 dual layers plus two creep zones. Size: 50 x 70 x 123mm.

L 5023

$66 SAVE $40

B&W Camera Module with Infrared LEDs

Adjustable focus with a 1/3" CCD area sensor image pick-up device, CCIR video system, 500 x 582 pixels, 625 lines 50 field/sec scanning system, 380 TV lines resolution and 0.1 lux useable illumination. Dimensions: 55 x 38mm.

L 5872

CLEARANCE *LIMITED STOCK*

$67* SAVE $32

CLEARANCE *LIMITED STOCK*

Programming & Customising The BASIC Stamp Computer

Comprehensive tutorials on the easy to use BASIC Stamp single board computer which runs a PIC microcontroller. Includes a CD-ROM providing software tools.

B 4807

$49.60* SAVE $40

FREE! A4 CAPACITOR CODE CHART WITH ANY COMPONENT PURCHASE

B 1000

LIMIT 1 PER CUSTOMER

CLEARANCE *LIMITED STOCK*

Dummies Special Bundle

This Dummies Special Bundle includes two of the most popular Dummies titles - The Internet For Dummies Australian Edition and Windows 98 For Dummies.

B 7152

$29.50* SAVE $20

Garage Door reed Switch

Normally closed (N.C.) reed switch designed for garage doors. Features 45cm armoured cable and adjustable 'L' magnet. Rated 100 Volts AC/DC at 1 amp.

L 5280

CLEARANCE *LIMITED STOCK*

$12.17* SAVE $15

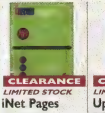

CLEARANCE *LIMITED STOCK*

iNet Pages

The Internet names guide to Australian businesses, with a directory of Australian websites in a classification format. Also includes a 70-page guide to marketing your business website.

B 0300

$3*

CLEARANCE *LIMITED STOCK*

Upgrade & Fix PC's For Dummies

Helpful advice on how to fix PC problems, establish faster Internet connections, add new sound and much more.

B 6053

$19.88* SAVE $10

Understanding Electricity

Comprehensive, practical and user-friendly, this covers everything that a novice needs to know in becoming a competent electronics experimenter.

B 1748

$23.54* SAVE $20

CLEARANCE *LIMITED STOCK*

Idiots' Guide To Windows 2000

Features valuable tips on avoiding common pitfalls, expert advice on integrating your system with the Internet, and easy to follow instructions for those new to Windows 2000.

B 7019

$19.88* SAVE $10

CLEARANCE *LIMITED STOCK*

Red Rotary Warning Light

Ideal for promotional use, store displays or as a warning device. Features 10W light bulbs (two included). Rated 12 Volts DC at 1 Amp.

L 6005

$13.20* SAVE $25

CLEARANCE

PHONE, FAX & MAIL ORDERS

PHONE: 1300 366 644 (Local Call Charge) **FAX:** (02) 9642 1155

MAIL: **DICK SMITH ELECTRONICS,** Direct Link Reply Paid 500, PO Box 500, Regents Park DC NSW 2143 (No Stamp Required)

Please add postage (up to 5kg) to your order, as follows:

• $8.00 (1c Up To $50) • $7.50 ($51 Up To $100) • $9.20 ($101 Up To $500) • $11.00 (over $500)

(Upon request for parcels weighing over 5kg)

email: directlink@dse.com.au (enquiries only)

Major Credit Cards Accepted • Gift Vouchers Available

NEW STORES AND RELOCATIONS

MARION (SA)
Shop 1052/3, Westfield Marion, 297 Diagonal Road, Oaklands Park. Ph: (08)8377 3733

TUGGERAH (NSW)
Shop 107, Westfield Shoppingtown, Wyong Road, Ph: (02)4353 2323

STRATHPINE (QLD)
Shop 66/67 Westfield Shoppingtown, Ph: (07)3881 1199

WARRINGAH MALL POWERHOUSE (NSW)
Shop 162/163 Block F, Warringah Mall, Ph: (02)9905 0868

EPPING (VIC)
560-602 High Street, Epping. Ph: (03)9408 4866

**Limited stock* *All stocks marked clearance, limited or with an '*' may not be available in all stores or via Direct Link. Rainchecks do not apply. Offers valid for the calendar month of June 2001.*

DICK SMITH ELECTRONICS *That's where you go!*

■ NiCads ■ NiMHs ■ SLAs ■ LiIONs ■ Bike batteries ■ Car batteries. . .

IT'S THE ONLY BATTERY CHARGER YOU WILL EVER NEED, EVER AGAIN!

FAST Universal Power Charger

Part 1
By JOHN CLARKE

For power tools, camcorders, R/C equipment and car batteries

Improved MkII version now charges Lithium-Ion and a huge range of Nicad, NiMH, SLA and lead-acid batteries. And YES, you can update the MkI version if you wish...

Waiting for your power tool batteries to charge can be a drag, particularly when you wish to use the tool immediately. This Fast Battery Charger can have your tools operational in a short time.

It will charge your power tool batteries in less than 15 minutes for a 1.2Ah Nicad pack. It includes full battery protection and employs end-of-charge detection to ensure that the cells are not damaged. Along with Nickel Cadmium (Nicad) and Nickel Metal Hydride (NiMH) batteries, you can also charge Lithium-Ion batteries, 6V and 12V Sealed Lead Acid (SLA) packs and Lead-Acid car and motorcycle batteries.

This is an improved version of our very popular Multi-Purpose Fast Battery Charger which was first published in the February and March 1998 issues of SILICON CHIP.

While the original charger provided for a host of battery types and voltages, inevitably there were calls from readers who wanted to use it for other voltages and for Lithium-Ion batteries. The original design also had a tendency to prematurely terminate charging on older batteries.

Note that if you built the previous version, you can upgrade to the new design by transferring all the components to the new PC board and changing some of the wiring to the switches.

Charger features

For those not familiar with the previous design, we will now outline the features of this very flexible charger. It uses a Philips TEA11012 IC to perform all the control functions of the circuit. It monitors charging current, battery or cell voltage and battery temperature (optional) and incorporates a timer to shut down charging if other methods of charge detection fail.

It is important when fast charging batteries that they are not overcharged. Both Nicad and NiMH types, if given too much charge, will overheat and be permanently damaged. LiION, SLA and Lead-Acid types should not be charged beyond a certain voltage or they too will be damaged and their life reduced. Nor should SLA and Lead-Acid batteries be undercharged since this will also lead to a shortened life.

Nicad batteries should also be discharged before recharging in order to consistently provide their maximum capacity.

Our new Fast Battery Charger provides accurate detection of full charge for Nicad and NiMH batteries and precise end-point voltage regulation for LiION, SLA and Lead-Acid types. It also has various protection features to prevent fast charge when the battery temperature is too high or low for Nicad and NiMH types and if the battery voltage is initially low for all battery types.

An added feature of the charger is the Refresh cycle which is used for Nicad batteries. This discharges the battery so that each cell reaches a nominal 1V before the charger begins to fast charge. Nicad & NiMH batteries are then fully charged and this is detected when the voltage begins to drop off from a maximum value.

If a thermistor is connected to monitor temperature of the battery pack, then the charger detects full charge when the temperature begins to rise at a rapid rate.

Once charged with high current (fast charge), Nicad & NiMH batteries are topped up with a 200mA current for about 90 minutes and then trickle-charged at 62mA to maintain their capacity before use. This trickle charge comprises short bursts of current which average to 62mA. These bursts of current prevent dendritic growth within NiMH and Nicad cells.

LiION, SLA and Lead-Acid batteries are initially fast charged and this current tapers off as the battery voltage approaches 4.1V for LiION and 2.4V per cell for SLA and Lead-Acid types. Charging stops at these voltages.

For 12V SLA and Lead-Acid batteries, this end point corresponds to 14.4V. Charging automatically starts again when the cell voltage falls to 2.2V for SLA and Lead-Acid types and to 3V for LiION.

Timer & LED indicators

The charger incorporates a timer which stops fast charge after a set period (called time-out). This prevents overcharging should the end of charge detection methods fail. Normally, time-out is about 1.6 times the expected charge time of the battery, as

Main Features

- Fast charges Nicad, NiMH, LiION, SLA and Lead-Acid batteries
- Suitable for 1.2V, 2.4V, 3.6V, 4.8V, 6V, 7.2V, 8.4V, 9.6V, 12V & 14.4V batteries from 1.2Ah to 4.2Ah plus LiION 3.6V, 7.2V & 14.4V
- Charges either 6V or 12V SLA batteries from 1.2Ah to 4Ah
- Charges 6V or 12V Lead-Acid batteries of any capacity above 1.2Ah
- Includes a discharger for Nicad batteries
- Top-off charging at end of fast charge plus pulsed trickle charge for Nicad & NiMH
- Voltage limited charge for SLA & Lead-Acid batteries
- Voltage drop & temperature rise (dT/dt) full charge detection for Nicad & NiMH
- Under and over-temperature cutout for battery
- Over temperature cutout for charger
- Short circuit battery protection
- Time-out protection
- Fuse protection
- Multi-LED charge indicators

Specifications:

- Fast Charge Current ..... nominally 6A
- Top-off current (Nicad & NiMH) 200mA
- Trickle current (Nicad & NiMH) 62mA
- Refresh current (Nicad) 2A
- Refresh discharge end-point ..... 1V per cell
- Battery-low detect (Nicad & NiMH) ..... 0.3V per cell
- Battery-low detect (LiION) ..... 0.9V per cell
- Battery-low detect (SLA & Lead-Acid) ..... 0.45V per cell
- Battery-high detect (Nicad & NiMH). ..... 2V per cell
- Battery-high detect (LiION) ..... 6V per cell
- Battery-high detect (SLA & Lead-Acid) ..... 2.97V per cell
- Charge voltage end-point (SLA & Lead-Acid) ..... 2.4V per cell
- Charge voltage end-point (LiION) ..... 4.1V per cell
- Recharge voltage after end-point (SLA & Lead-Acid)..2.2V per cell
- Recharge voltage after end-point (LiION) ..... 3V per cell
- Voltage peak detection (Nicad & NiMH) .. 0.25% drop in top value
- Temperature rate detection level (Nicad & NiMH) 0.25%
- Under-temperature cutout (Nicad & NiMH) ..... 12° C
- Over-temperature cutout (Nicad & NiMH) ..... 50° C
- Charge over-temperature cutout ..... 80° C.
- Fast-charge time-out ..... 15, 30 or 60 minutes (nominal)
- Top-off charge time (Nicad & NiMH) ..... about 90 minutes

determined by the capacity and charge current.

When charging Lead-Acid batteries, the timer is reset at regular intervals to prevent time-out. This is because Lead-Acid batteries have a large capacity and require a much longer time to charge than the timer can accommodate.

Various indicating LEDs show the status of the Fast Charger: Refresh, Fast, Protect, 100% and No Battery.

The REFRESH LED indicates when a Nicad battery is being discharged. The discharge function is initiated by pushing the adjacent Refresh pushbutton. Refresh is only available when the charger is set to charge Nicad or NiMH batteries although it is not necessary to refresh NiMH batteries since they do not exhibit memory effect.

The FAST LED shows that the charger is delivering a maximum of 6A to the battery under charge. After the battery is charged, the 100% LED is turned on.

While this LED is on, the Charger is in "Topoff" mode which delivers a slow charge at 0.15 of the full fast current. After Topoff, the LEDs are all off and the charger is in trickle mode for Nicad & NiMH batteries but there is no further charge current for LiION, SLA and Lead-Acid types.

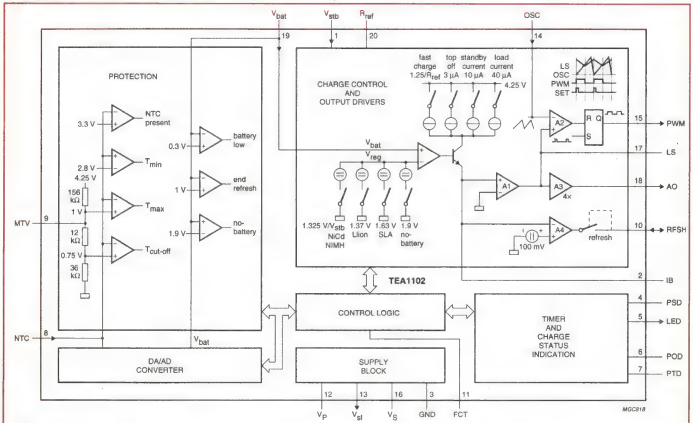

Fig.1: inside the Philips TEA1102 battery management IC. This versatile chip forms the heart of our fast charger.

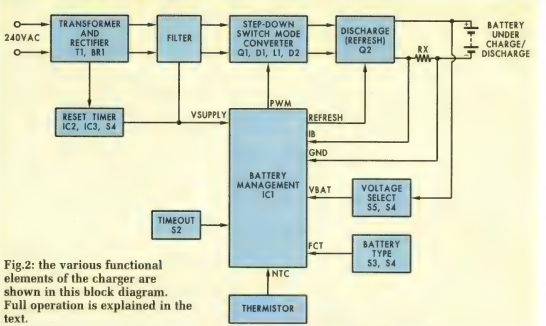

Fig.2: the various functional elements of the charger are shown in this block diagram. Full operation is explained in the text.

The PROTECT LED shows when a battery is shorted or has low voltage after a certain period of charging. It also lights with over or under-temperature if the thermistor in a battery pack is connected.

The NO BATTERY LED only lights when Nicad & NiMH battery types are selected and if the thermistor is not connected to the charger. It simply indicates that the battery is either not connected or has a high impedance.

When using the battery charger it is important to select the correct setting on the front panel for the particular battery under charge. You will need to select the battery type (Nicad, NiMH, LiION, SLA or Lead-Acid) and the battery voltage. Also the timer must be set to give a suitable safety time-out for the capacity of battery connected.

Battery management IC

As noted above, all of the charging features are provided by a single battery management IC, the TEA1102 from Philips Components. Its block diagram is shown in Fig.1.

It comprises analog and digital circuits which are divided into six separate sub-sections, as shown on the block diagram. The charge control and output driver section comprises a current source, battery selection, oscillator, comparators, amplifiers and a pulse width modulation (PWM) and analog control output.

Battery voltage is monitored at the Vbat input (pin 19) and this is compared against the Vreg voltage which sets the end-point voltage for charging the selected battery type. Options are for Nicad & NiMH, LiION and SLA.

Note that there is a different Vreg selection for each type of battery but these do not refer to the voltage to which each cell is charged. The V/Vstb (Vstb means Voltage at standby) for Nicad & NiMH batteries refers to an option of either voltage regulation at end of charge or trickle charge. The no-battery selection automatically switches in when the Vbat voltage is above 1.9V.

The comparator monitoring Vbat and Vreg controls the constant current source transistor which is supplied with one of four currents: fast charge, top-off, standby and load. When power is first applied, the TEA1102 is reset and fast charge is selected. Fast charge is set by a resistor at Rref (pin 20) to select the current flow to the IB output at pin 2.

The current from the IB output pin flows through an external resistor to develop a voltage monitored by the two internal op amps, A1 and A4. A1's output is amplified by A3 to give an analog control output at pin 18. A1's output is also compared in A2 against a triangle waveform generated by the oscillator at pin 14. A2's output is applied via a flipflop to provide a pulse width modulated (PWM) output to drive external circuitry to control the charge current.

Refresh (Nicad discharge) is initiated by momentarily connecting the RFSH output (pin 10) to ground. This turns off the current source and op amp A4 drives an external transistor connecting across the battery. The current is set by a series current detecting resistor and the 100mV source at the non-inverting input to A4.

The DA/AD converter monitors battery voltage when charging Nicad & NiMH batteries. As the battery is charging, the voltage gradually increases and at a regular period, the AD converter samples the voltage and stores it as a digital value if the voltage has increased from the previous reading. When the voltage begins to fall, the lower voltage is not stored but compared with the analog voltage resulting from the digital stored value. A fall of 0.25% indicates that the battery is charged and the charger will then switch to trickle mode.

The DA/AD converter also monitors the thermistor voltage via the NTC input at pin 8. If the thermistor is connected, the DA/AD converter switches off fast charge when there is a sudden rise in temperature of the battery which also indicates full charge. Note that the fast charge will be switched off if a low or high temperature is detected by the Tmin and Tmax comparators.

By the way, NTC stands for the Negative Temperature Coefficient of the thermistors fitted into Nicad and NiMH battery packs. As the temperature rises, the resistance of the thermistor drops (ie, negative coefficient) and this is monitored by the circuit.

The "NTC present" comparator detects the connection of the thermistor, while the T-cut-off comparator switches on for a 0.25% rate of rise in temperature. The MTV input (pin 9) can be used to calibrate the thermistor temperature at Tmax.

The Control Logic section monitors and sets the operation of the various blocks within the IC. Voltage on the FCT input (pin 11) selects the type of battery to be charged. The Supply Block takes its supply at the Vp pin and produces a reference voltage at the Vs output (pin 16). This reference provides an accurate and stable source for the

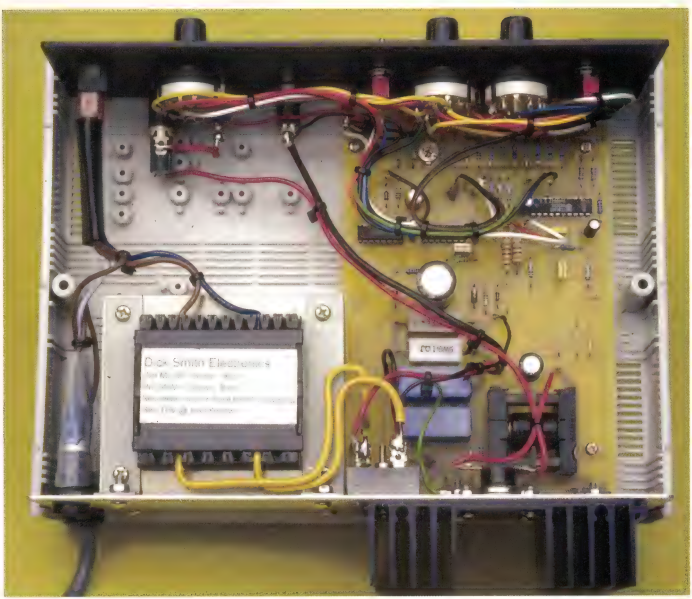

With the exception of the power transformer, bridge rectifier, thermistor and the front panel controls, just about everything else mounts on a single PC board. The complete assembly and wiring detail will be presented next month.

battery end-point voltages. The Vsl output is used to switch on power to external indicating LEDs. These LEDs are driven by pins which serve a dual purpose and are seen in the Timer and Charge Status Indication block.

Pins 4, 6 and 7 are used both as programming pins for the timers and as LED drivers. These pins are initially monitored at power on to check what options are set before the LEDs are lit.

Block diagram

Fig.2 shows how we have used the TEA1102 battery management IC in our charger circuit. Transformer T1 and bridge rectifier BR1 provide an 18V DC supply for the charger circuit. This is lightly filtered to provide DC for the control circuitry but is fed through directly (ie, essentially unfiltered) to the switchmode step-down converter comprising transistor Q1, inductor L1 and diodes D1 and D2.

In effect, the battery under charge is fed with chopped and unfiltered DC. This allows a considerable saving on electrolytic filter capacitors and reduces power losses in the main series pass transistor, Q1.

Circuit description

Fig.3 shows the full circuit for the Multipurpose Fast Battery Charger.

Power for the circuit comes from T1, an 18V 6A transformer which feeds the bridge rectifier BR1 and two 10µF 100VW polyester capacitors. These supply the peak current to the switchmode supply comprising transistor Q1, diode D1 and inductor L1.

The Pulse Width Modulation output at pin 15 of IC1 drives transistor Q3 which operates as a pulsed "current sink" to provide 34mA base current to Q1. Q1 switches current through inductor L1 and diode D2 into the battery load. When Q1 switches off, diode D1 enables the energy stored in the inductor to flow into the battery. Diode D2 prevents battery current from flowing back into the switchmode circuit.

The 100µF capacitor across the battery is there to filter the supply when no battery is connected so that the "no battery" detection will operate within IC1.

Fig.3 (right): the complete circuit diagram of the fast charger.

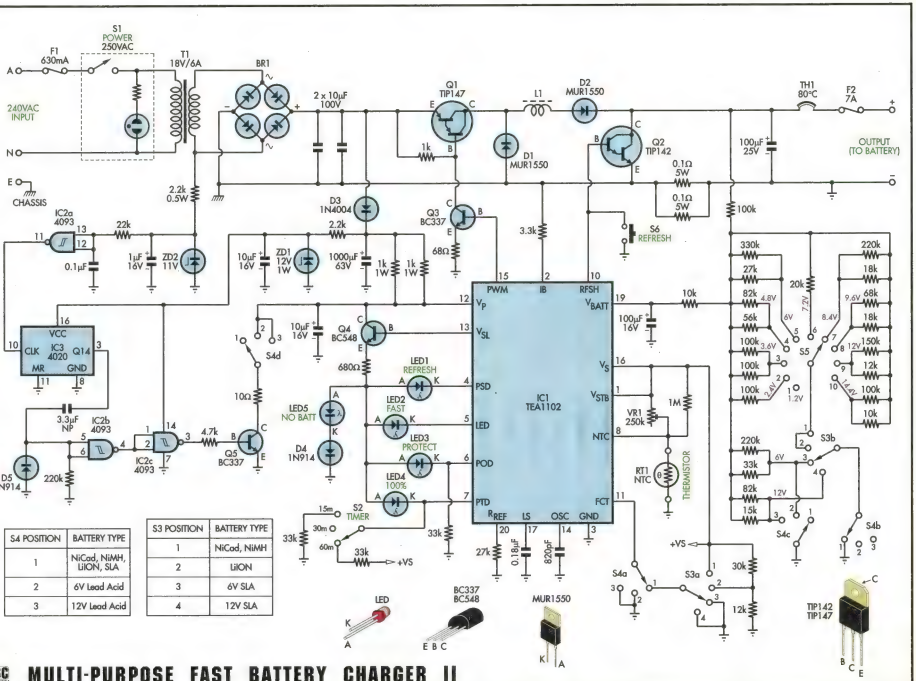

S4 POSITION	BATTERY TYPE
1	NiCad, NiMH, LiION, SLA
2	6V Lead Acid
3	12V Lead Acid

S3 POSITION	BATTERY TYPE
1	NiCad, NiMH
2	LiION
3	6V SLA
4	12V SLA

MULTI-PURPOSE FAST BATTERY CHARGER II

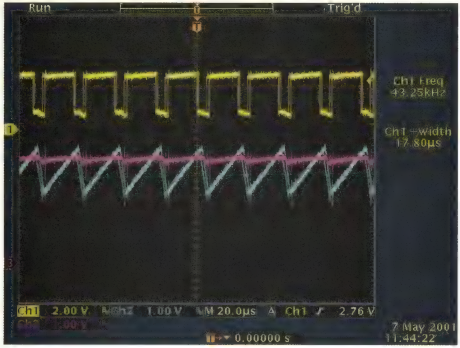

Fig.4: these 'scope waveforms show the switchmode operation of the charger. The triangle waveform (blue trace) is the output of the oscillator at pin 14 of IC1 while the purple trace intersecting the triangle waveform is the DC output of IC1 at pin 17. These two voltages are compared internally by IC1 to produce the PWM output at pin 15 which is the upper trace (yellow). Note that there is some jitter in these traces; this is caused by the fact that the circuit constantly hunts back and forth as it maintains a set current into the battery.

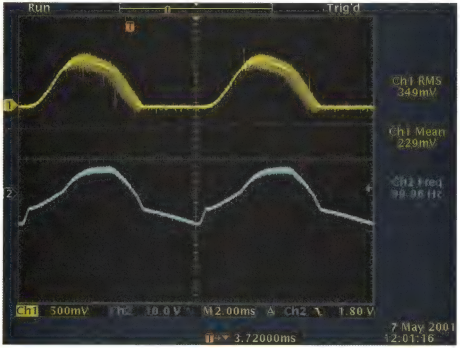

Fig.5: these 'scope waveforms show how the battery is charged with what is essentially switched unfiltered DC. The lower trace (blue) is the unfiltered DC input to the anode of diode D3 while the upper trace (yellow) is the voltage waveform across the two paralleled 0.1Ω sensing resistors. The RMS value of the voltage is 349mV so the resultant current is 6.98A. The mean value (that would be obtained on a standard multimeter) is only 229mV which would indicate an average current of 4.58A.

The charge current is monitored by the .05Ω resistance (two 0.1Ω 5W resistors in parallel) connected in the ground return path to the emitter of Q2. IC1 monitors this via the IB input at pin 2 which is tied to the same "ground" via a 3.3kΩ resistor.

Its operation is as follows: the Rref output at pin 20 is 1.25V and this is applied to the external 27kΩ resistor to set the current flow from the IB output (pin 2). The PWM output from pin 15 of IC1 controls the charge current into the battery so that the drop across the .05Ω resistance equals the voltage across the IB resistor to ground. The 0.18µF capacitor at the LS output (pin 17) filters the current feedback waveform.

The Rref resistance at pin 20 also sets the oscillator frequency in conjunction with the 820pF capacitor at pin 14. The frequency of oscillation is about 50kHz. The time-out period is determined by the oscillator frequency and the switch setting at pin 7.

When pin 7 is pulled low via the 33kΩ resistor at switch S2, the timeout is about 15 minutes. An open setting of S2 increases the timeout by a factor of two and when S2 pulls pin 7 high, the time-out is increased by a further factor two. These last two settings give the 30-minute and 60-minute settings.

Battery selection

Detection of battery type is done with using the (Fast Charge Termination) input at pin 11. When pin 11 is grounded via switches S4a and S3a, the SLA battery charge procedure is selected. When S4a is in positions 2 & 3, it ensures that pin 11 is grounded, regardless of the position of S3a.

This prevents Lead-Acid batteries being charged as Nicad or NiMH types which would result in over-charging.

LiION charging occurs when the FCT pin is at about 1.2V, as set by the 30kΩ and 12kΩ resistors. Similarly, Nicad and NiMH battery types are selected when pin 11 is connected via S3 to the 4.25V reference at pin 16.

The Vstb (pin 1) input selects trickle charging after Nicad or NiMH batteries are charged rather than the voltage regulation option when pin 1 is open circuit.

Voltage selection

The Vbat input, pin 19, monitors the battery voltage via a filter network consisting of a 10kΩ resistor

and 100µF capacitor, and via a resistive divider network switched by S5 and S3b.

For Nicad, NiMH and LiION batteries, the division ratio is such that pin 19 sees only the single cell voltage. For example, with the 6V (5-cell) setting we divide the battery voltage by five to produce the equivalent single-cell voltage. The single cell setting at position 1 of S5 thus provides no resistive division of the voltage.

The voltage divider for SLA and Lead-Acid batteries is selected when S3b is in position 3 or 4. The division ratio for 6V and 12V takes into account that the regulation voltage for SLA types is 1.63V at the Vbat input. For example, with a 12V battery, we want to charge it up to 14.4V or 2.4V per cell, so the division must be 14.4/1.63 or 8.83.

Pin 8, the NTC input, detects if there is a thermistor in the battery pack. The 1MΩ resistor and VR1 at pin 8 pull the voltage up to 4.25V if no thermistor is present and to about 2V if one is connected, at normal room temperature.

The thermistor is heated by the cells under charge and any sudden rise in temperature will produce a voltage drop at the NTC input. The charger will sense this as full charge and cease charging. If a sudden change is not detected before the thermistor voltage reaches 1V, the fast charge will cease because of over temperature.

LED indication is provided on the LED, POD, PTD and PSD pins and controlled via the Vsl output. At power up, all LEDs are off and the IC looks at the POD, PTD and PSD pins to check the division ratio programming set on these pins. After this, the LEDs can be lit when Vsl goes high to turn on transistor Q4 via the 680Ω resistor.

Refresh cycle

Transistor Q2 turns on to discharge Nicad batteries when the pin 10 output of IC1 is momentarily shorted to ground via S6. Note that the switch-mode circuit is disconnected while Q2 is turned on.

In other words, the discharge current is continuous, not pulsed. Current flow through Q2 and the battery is also via the .05Ω resistance and is detected at the IB input at pin 2. This discharge current is regulated to 100mV/.05Ω or 2A.

Power

Power for IC1 comes from the positive side of bridge rectifier BR1 which charges a 1000µF capacitor via diode D3. D3 reduces the ripple on the capacitor and also prevents charging current for the battery being drawn from this capacitor.

A 500Ω resistance comprising two 1kΩ resistors in parallel supplies current to pin 12 which has an internal 12V zener diode regulator. A 10µF capacitor decouples this supply rail.

A 2.2kΩ resistor feeds the D3 supply to 12V zener diode ZD1, to power IC2 and IC3. These two ICs form the reset timer. The AC side of bridge rectifier BR1 feeds the 11V zener diode ZD2 via a 2.2kΩ resistor. ZD2 limits the voltage to 11V when the AC goes positive and to -0.7V when the voltage goes negative. The 1µF capacitor across the zener diode smoothes the resulting 50Hz waveform and this is again filtered with a 22kΩ resistor and 0.1µF capacitor and fed to IC2a. This squares up the 50Hz waveform which then clocks IC3.

IC3 is a binary counter with the Q14 output producing a high output every 5.5 minutes. The high output is fed to inverter IC2b via a 3.3µF capacitor and the signal is inverted again by IC2c. IC2c drives transistor Q5 which momentarily pulls pin 12 (the 12V supply of IC1) to ground via a 10Ω resistor. This resets the internal timer of IC1.

Next month, we will present the full construction details and the parts list for the Fast Charger. **SC**

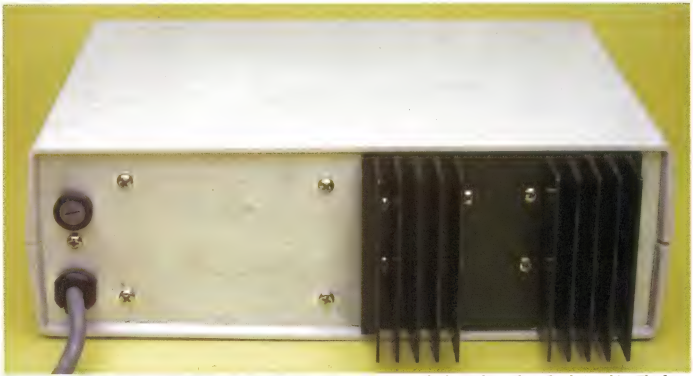

The rear panel of the charger isn't particularly inspiring. Power in, fuse and a heasink are the only obvious bits. The four screws hold the power transformer in place against the rear panel.

CIRCUIT NOTEBOOK

Interesting circuit ideas which we have checked but not built and tested. Contributions from readers are welcome and will be paid for at standard rates.

Convert a momentary pushbutton to alternate action

This two-inverter circuit allows a momentary contact pushbutton to provide alternate action: press on, then press off. Normally S1 will be off and capacitor C1 will be charged to the same voltage as at the output of IC1a. If S1 is momentarily closed, IC1a will be forced to change state (ie, low to high or high to low at the output).

If the output at pin 2 changes to high, this will be inverted by IC1a and fed back to pin 1 after S1 is released and so the circuit will remain in the new state until S1 is pressed again.

If S1 is held closed (ie, pressed continuously), the circuit will oscillate at a frequency determined by the time-constant of R2 and C1.

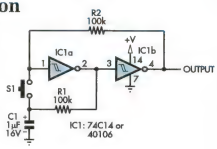

Brendan Ede, Nerang, Qld. ($30)

Precision voltage calibrator

A very stable dual DC voltage calibrator is extremely handy for the calibration or simulation of DC amplifiers, comparators, Schmitt triggers, temperature monitors and so on.

Precision means precise individual settings, highly stable over an ambient temperature range of 10-55° Celsius; very common in Australia. This is accomplished with a good basic device, the LM336-5.0 and the temperature compensation/setting circuit D1, D2 & VR1.

All resistors are 1% 0.25W metal film types and VR1, VR2 & VR3 should be good quality 15 or 20-turn precision trimpots or instrumentation-grade potentiometers. Although the reference voltage at pin 7 of IC1a can be adjusted within the range of 4.000V to 6.500V, best temperature stability occurs when it is set to precisely 5.000V.

Absolute accuracy (seldom required) is obtained by connecting a certified 4.5-digit DVM (digital voltmeter) to the DVM terminals. In practice, a good quality 3.5-digit DMM will suffice.

S1, a 3-pole, 4-way rotary switch, allows individual voltages to be set at terminals A and/or B via VR2 & VR3. Position 4 of S1, R4 (user selectable) is a useful additional calibration mode, using a high accuracy, 0.1% resistor. A value of 250Ω will give a reading of 1V to 5V with a 4 to 20 mA loop but any value or accuracy that suits an application is fine; just remember the switch contact current rating!

The link between Common and True earth allows floating common or reversed polarity mode when it is removed. When present, the link provides a connection to mains earth when required.

D R Gott,
Toowoomba, Qld. ($50)

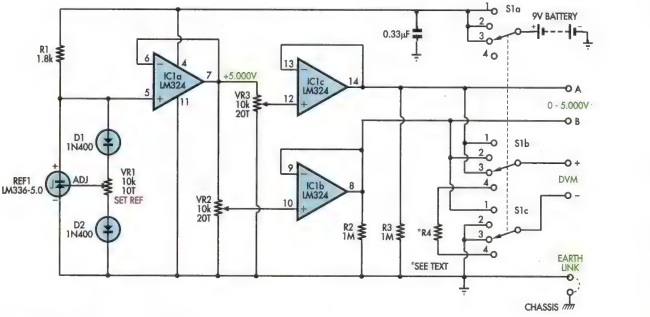

Running a LED from 240VAC

We have had a number of requests for a circuit to power a LED from the 240VAC mains supply. This circuit uses the high impedance (at 50Hz) of a 0.1µF 250VAC capacitor to drop most of the voltage before it is applied to a high brightness LED. This avoids the need for a 5W wirewound resistor which would otherwise be required to supply the LED current. The 1N4004 diode is included to protect the LED from the reverse swing of the supply.

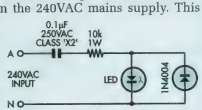

The series 10kΩ 1W resistor is included to protect the LED against initial surge current when power is applied. The brief pulse current resulting if the supply is connected at the 340V peak voltage could be enough to destroy the LED. By the way, this circuit is not suitable for flashing LEDs.

Note that, even though we are publishing this circuit, we think it is impractical due to the bulk and relatively high cost of the 0.1µF 250VAC capacitor. It is far more practical and cheaper to use a standard panel-mounting neon with inbuilt current limiting resistor (typically 150kΩ); eg, Altronics S-4015.

SILICON CHIP

Computer controlled chaser

This circuit offers a cheap and effective LED chaser that can be controlled by computer. It is based on the 4017 decade counter and only has two connections to the computer via the printer port, one to reset the counter (pin 15) and another to increment it (pin 14).

The resistors on pins 13-15 tie these inputs to ground. Ten LEDs are connected to the counter outputs, but for different patterns you could connect more than one LED to an output. The power supply is regulated to +5V so that the 5V on the printer port's lines are sufficient to count as a high for the 4017.

With the 4017 driving the LEDs directly, you will need to use high intensity LEDs and even then they won't be particularly bright. To drive them harder, you will need a transistor on each of the 10 outputs, as shown.

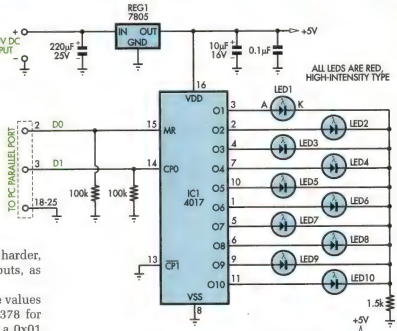

To drive the circuit you need to write specific byte values to the respective printer port I/O port address (0x378 for LPT1, 0x278 for LPT2). To reset the counter, write a 0x01 byte to the port. To increment the counter, write a 0x02 byte to the port.

You could do this using the DEBUG.EXE program or by writing your own simple software.

Alternatively, two programs have been written to drive the circuit. One allows you to simply control it manually, while the other allows you to send a pattern file containing 0x01 and 0x02 bytes where needed. If would like a copy of these programs, contact the author at LesleyK@Hyper-max.net.au or download from the SILICON CHIP website – www.siliconchip.com.au

You can create your own pattern files with a hex editor, but you must terminate the file with a 0xFF byte and the file must be no longer than 512 bytes.

Owen Klan,
Rathdowney, Qld. ($40)

Just like ET, with this project you can phonome from anywhere in the universe. Unlike ET, when you phonome, you'll be able to do lots of things, like turn devices on and off, monitor things, listen to sounds in your home and much more. Best of all, it's completely legal because no connection is required to your phone or line. No alien visitors here!

PHONOME

by Leon Williams

Phonome Features

- PIC microcontroller based
- Independently control 2 relay outputs
- Monitor 2 opto-coupled inputs
- No direct connection to telephone line
- Controlled by a tone telephone anywhere in the world
- Dial in and listen to any sounds in your house
- Easy to recognise multiple frequency tone responses
- 6 digit password protection
- EEPROM stores password in case of power failure
- Intelligent ring detection
- Powered from low power 12V plug pack
- Cheap and easy to build

I'm sure there have been many times when you have been away from home – perhaps on holidays – and wondered if you've forgotten to turn something on or off.

Or perhaps you would have liked to monitor the alarm system or feed the goldfish or wondered if the dog is barking. Maybe the next-door-neighbour has called your mobile to say there are noises coming from your home. You'd love to be able to "listen in" to home before calling the Police.

With the Phonome you can do all this and much more.

The Phonome (phone home, geddit?) is a PIC-microcontroller-based unit that sits alongside your hands-free telephone or speaker-phone.

It listens for a ring from the telephone and when that ring is detected, it operates a solenoid that presses the speaker button on the telephone to answer the call. The Phonome then listens for a DTMF password from the speaker.

If it gets that password, it maintains the call, allowing you to control things by pressing keys on your telephone, or simply to listen in via the speaker-phone. When you are finished, you enter a command that operates the solenoid again releasing the call.

What things can you control? That's entirely up to you. We simply provide a couple of relay outputs and some opto-isolated signal inputs for you to do or control anything you wish.

Not every phone will do

For the Phonome to work you will need to have a telephone that has a speaker button that when pressed answers the call, enables hands free operation, and when pressed again releases the call. There is a large range of these telephones on the market and many of the cordless telephone base stations also incorporate these features.

We use this push button and the speaker to avoid having to connect anything to the phone or line.

The Phonome accepts DTMF tones. DTMF stands for Dual Tone Multiple Frequency, a universal system used for signaling over telephone lines. DTMF tones are made up from two separate tones, generated simultaneously and transmitted down the telephone line when you press the keys on any modern telephone keypad.

A normal telephone keypad has only 12 buttons - 0-9, # and *. But there are actually 16 tones that can be generated because one tone is made from a bank of four low tones and one from a bank of four high tones.

DTMF tones are used all over the world, so no matter where you are, whether using a pay phone, a house phone or even a mobile phone you will be able to access the Phonome. Of course old-style decadic or pulse-dialing telephones are not suitable – but these are fairly rare these days anyway.

No connections

The unique feature of the Phonome is the way it interacts with the telephone, without actually connecting to the telephone line. By not connecting directly to the telephone line we avoid the expense and complexity of having to comply with the normal regulatory rules.

To answer and release calls, a lever operated by a solenoid is used to press down the speaker button on the telephone for about one second. An electret microphone in the Phonome box then acoustically receives DTMF tones from the telephone speaker.

The "Phonome" control box, showing the holes drilled in the side for the speaker and also the electret microphone glued in position.

Table 1:Key Commands	
1	Turn ON relay 1
2	Turn OFF relay 1
3	Turn ON relay 2
4	Turn OFF relay 2
5	Read Input 1
6	Read Input 2
*	Change Password
#	End the call

Conversely, tone responses from the Phonome are generated by an internal speaker which are picked up by the telephone's microphone. To detect an incoming call, the Phonome uses the microphone to listen for bursts of sound and decides if it is a valid call or if it is spurious noises, which it rejects.

Normal ring signal is comprised of a 400ms burst, 200ms silence, 400ms burst and a 2-second silence, which can easily be distinguished from noise.

To allow us to do all these things simply and reliably, a PIC 16F84 microcontroller is used to perform all the control functions. By using a microcontroller we can also have nice features such as password checking, idle time protection, informative tone responses and ring training.

Ring training is used to train the Phonome to the particular ring cadence that your telephone emits. More about this and the other special features later.

Apart from the solenoid assembly the project is constructed on a single PC board and housed in a plastic box. Power is supplied from an unregulated 12V DC 500mA plugpack.

Commands

The Phonome responds to DTMF tones that are sent each time you press a key on the telephone. Table 1 shows the possible commands, with the corresponding telephone key.

Note that there must be two # key presses in a row to end the call. If any key not shown in Table 1 is pressed, it is ignored and an error tone is returned.

Tones

Various audible responses are generated by the loudspeaker. Because this is the only communication between the Phonome and you, the responses have been chosen to be informative and easy to recognise.

The responses range from a single burst of tone (called a beep) to a multiple combination of different frequency tones, ranging from 500Hz to 2100Hz. Once you hear the responses a couple of times you will quickly become familiar with them.

Table 2 describes the responses and the associated tones.

Circuit description

The circuit is shown in Fig.1. As you can see the heart of the design is the PIC chip (IC1) which does all the hard work.

The PIC chip used here is a 16F84 and has been used in many Silicon Chip projects. It has 1K of ROM, 68 bytes of user RAM and 64 bytes of non-volatile EEPROM.

The EEPROM holds the password and other data in case of a power failure. When power is restored, the data is read from the EEPROM into RAM for program use. Like all microcontrollers it needs to be programmed with the correct instructions. These instructions come in a file called DIALUP.HEX, and more details about this and how you get it are at the end of the article.

Firstly, let's have a look at the analog input circuit (see Fig.1).

DTMF tones are received by the electret microphone, which obtains DC bias via a 10kΩ resistor. The small audio signals from the microphone are capacitively coupled to amplifier IC1b, an inverting op amp. Here the signal is amplified about 4 times.

A .001µF capacitor provides low pass filtering in an effort to eliminate high frequency noise so that the DTMF detector has an easier time decoding the digits.

From IC1b the signal goes in two directions. The first path is to IC1a, another op amp which provides a variable gain up to about 25. The variable gain is accomplished by adjusting trimpot VR1, and is included to raise the level of the DTMF signals to suit the following DTMF decoder. Once again a .001µF capacitor provides low pass filtering. The output signal is coupled by a .01µF capacitor into the DTMF detector IC2.

Note also that the inter stage coupling capacitors are reduced in value to help keep out low frequency signals such as 50Hz hum.

Although the DTMF signals pass through the telephone network, get reproduced by a speaker, are picked up by a microphone and amplified, the DTMF decoding has proved to be very reliable.

The second path for the microphone signal is on to op amp IC1c. IC1c provides a variable gain up to about 25, made adjustable by trimpot VR2. This adjustment sets the detection level for the ring bursts.

From IC1c, the signal passes to IC1d which is configured as a comparator. The output of a comparator rests at

Table 2:Phonome Beep Translation

Tone name	When tone heard	Tone (beep) description
Power	When the unit is powered up	1 long medium frequency
Answer	After ring is detected and the solenoid is operated to answer the call.	20 short high frequency
Connected	When a correct password is decoded.	3 short rising frequency
Password	At the start and end of changing a password. Also heard after programming default values has finished	6 short medium frequency
Off	When a tested input is off, or a relay is turned off.	1 long low frequency
On	When a tested input is on, or a relay is turned on	2 short rising frequency
One	Indicates relay 1 or input 1.	1 short medium frequency
	Also heard at the start of DTMF testing.	
Two	Indicates relay 2 or input 2. Also heard at the start of ring training.	2 short medium frequency
Error	When an unknown key is pressed, or the first password attempt is wrong.	4 long low frequency
Finished	When the call is about to be terminated.	4 long descending frequency

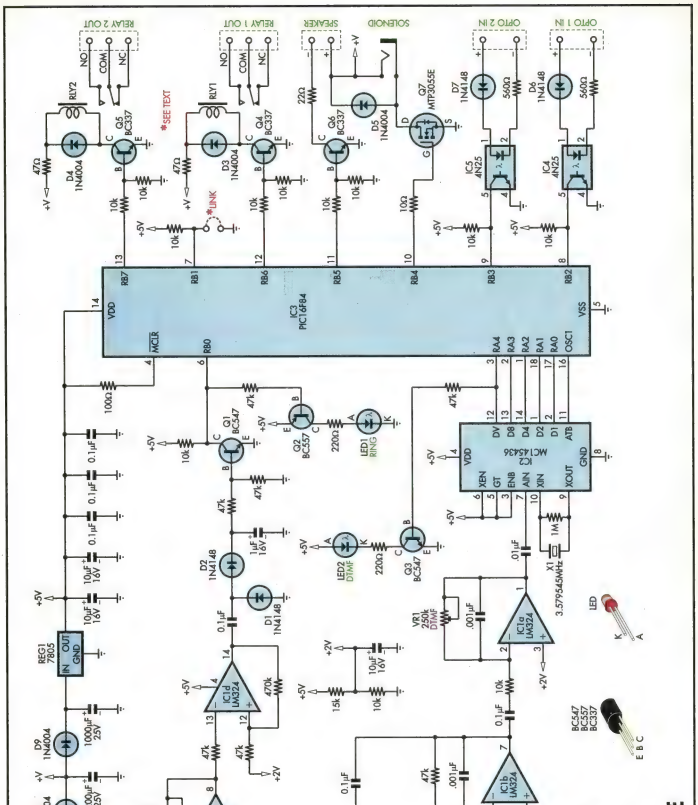

Fig. 1: the Phonome circuit diagram.

either rail until the input signal exceeds the threshold level. The threshold level is determined by the ratio of the 47kΩ and 470kΩ resistors connected to pin 12. When this level is exceeded the output of IC1d swings between the rails, so IC1d is acting like a very high gain amplifier.

This high level signal is then passed to a charge pump rectifier (D1 and D2) which charges the 1µF capacitor. The rectifier capacitor values are deliberately small so that the voltage on the 1uF capacitor closely follows the ring cadence. Transistor Q1 inverts the voltage to logic levels for the PIC input, such that a burst of ring is a low and silence is a high. Transistor Q2 lights LED1 when the ring burst is active, and provides a visual aid when setting trimpot VR2. A 15kΩ and a 10kΩ resistor supply a 2V reference point for the op amps, while the 10µF capacitor provides filtering.

IC2 is a MC145436 DTMF detector and accepts audio signals from IC1a via pin 7. This chip is quite popular, and here it is used in its basic form. The outputs are permanently enabled by taking the Tri-state enable pin high, and the internal oscillator function is used. When a valid DTMF tone is received on pin 7, it takes pin 12 (Data Valid) high and the hexadecimal value of the tone is output on the data pins 1, 2, 13 and 14. Transistor Q3 turns on LED2 when Data Valid goes high and is used while setting the correct position of trimpot VR1. Pins 9 and 10 are the oscillator pins and a common 3.5795MHz crystal is used. To save the cost of using another crystal, a divide-by-8 clock output (447kHz) at pin 11 is used for the PIC clock.

So much for the input circuit. Now let's look at the main circuit incorporating the PIC chip.

Pin 4 is the reset pin and is simply tied to +5 volts by a 100Ω resistor. The PIC has a built-in intelligent reset circuit and this should prove to be adequate in this application. As discussed above, the PIC uses an external clock input provided by the DTMF decoder. This is input on pin 16, while the other clock pin (pin 15) is not used and left open.

While 447kHz is a relatively low frequency for a microcontroller, the PIC still has plenty of time to complete its functions. However, the software must on occasions take into consideration the slow clock rate (instruction cycle time about 8.94µS). An example is the tone generation routines that turn on and off the output pin at the tone frequency rate.

Port A has five pins associated with it and all are programmed as inputs. RA0 to RA3 accept the hexadecimal DTMF code, while RA4 monitors the Data Valid line. Port B is configured so that pins RB0 to RB3 are inputs while RB4 to RB7 are outputs.

The ring signal waveform is monitored on RB0. The software monitors this pin and measures the time the input is low and the time it is high over a 6-second period. If the low and high times fall within the programmed values held in the internal EEPROM, then the signal is considered valid ring.

Pin RB1 is checked at power up. If it is low (by shorting the password pins together on the PC board) the PIC goes into the special features mode. More about this later.

Under a normal power up RB1 is read high because of the 10kΩ pull up resistor and normal operation continues. RB2 and RB3 are connected to opto couplers. They are normally held high by the 10kΩ pull resistors but are pulled low when current flows in the opto-coupler LEDs. A diode and a resistor provide polarity and over current protection for each opto-coupler input. When current flows into the opto-coupler LED, the PIC pin is pulled low and the PIC reads this as ON.

Pin RB4 drives a power Mosfet (Q7) that switches the solenoid. When the PIC pin is high, the solenoid is ener-

Fig.2: component overlay of the Phonone. Only the microphone, speaker and jacks mount off the PC board.

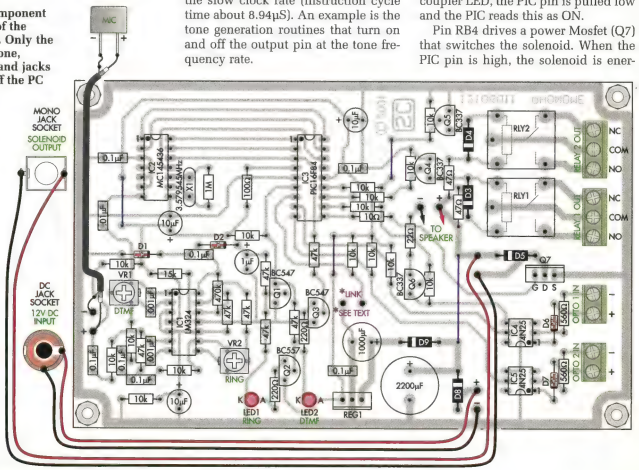

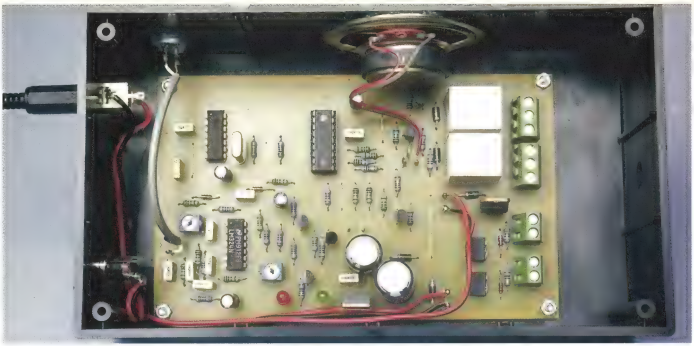

Inside the Phonome control box. The plugpack and solenoid connections are on the left while the right terminal blocks are for inputs and outputs. Note the electret microphone glued in position on the upper case wall with the speaker alongside.

gised. Diode D5 is included to limit reverse voltage spikes generated by the inductive solenoid.

Pin RB5 is the output that is toggled high and low by the software at the tone audio frequency. This drives transistor Q6 which in turn drives the speaker. A 22Ω resistor limits the current drawn when the transistor is on and consequently determines the volume of the tones. A speaker and the necessary driver software was used rather than a simple piezo buzzer, because it allows tones of different frequencies to be generated.

Pins RB6 and RB7 drive transistors that independently operate two SPDT relays (RLY1 and RLY2). Each relay coil has a diode in parallel to limit reverse voltage spikes and a 47Ω resistor is included between the coils and the unregulated supply rail. This rail will probably be greater than 12V and considering that the relays may be energised for long periods, the resistors drop the voltage to limit the heat generated in the coils.

The power supply is relatively straightforward, with a 7805 regulator (REG1) providing a regulated +5V to the electronics. Diode D8 provides reverse polarity protection and a 2200µF capacitor smoothes the supply and provides extra capacity when the relays or solenoid are operated. Diode D9 isolates the regulator from input voltage drops during these short periods with the charge on the 1000µF capacitor helping maintain the regulator input voltage. If we didn't do this, it may be possible that the +5V rail may drop out for brief periods when the relay and solenoids operate causing the PIC chip to reset.

Construction

Start construction of this project by assembling the PC board. There are four wire links to be installed (one of which is much longer than a resistor pigtail offcut), so do these first. Ensure they are straight and lay flat on the PC board. Follow this with the smaller components, such as the PC stakes, IC socket, trimpots, resistors and diodes.

It is a bit difficult to read the value of 1% resistors with the eye, so do as I do and check them with a meter before insertion. Their colour codes are also listed in Table 3. Next, install the capacitors, ensuring that the electrolytics are installed with correct polarity. The relays and terminal strips can be installed next. The holes for these components may need enlarging so that they fit neatly into the PC board. Follow this with the LEDs, transistors and ICs, with the exception of the PIC chip which should be left until later. Note that not all the ICs face the same way, so check the component overlay diagram before soldering them in.

The 5V regulator (REG1) runs quite cool and won't need a heatsink. The transistors are a mixture of different types including PNP and NPN, so check that you have the right one before inserting them in the PC board.

Once the PC board is finished you can prepare the case which needs to have a number of holes drilled in it. See the photographs as a guide. Start with holes to mount the DC socket and solenoid socket at the left hand end. At the far end, where the terminal strips are located drill a large (say 10mm) hole to allow cabling to enter.

Place the PC board on the bottom of the case locating it so that the edge where the LEDs are mounted is a few millimeters from the side of the case, mark the position of the holes, remove the PC board and drill with a 3mm drill. Mounting the PC board this way gives extra room to mount the speaker on the opposite side.

A series of holes needs to be drilled to allow sound to escape from the speaker through the case wall. These are located about mid way along on the other side. On the same side but towards one end is a hole for the mic insert. Once all the holes are drilled and reamed to size, mount the speaker with a bead of silicone adhesive placed around the edge.

The mic insert is also glued into position with silicone adhesive. Firstly, push the insert through the hole until the face is flush with the outside of the case. Then run a bead

Parts List – Phonome

1 PC board code 12106011
1 Plastic case 197mm x 113mm x 63mm
10 PC board stakes
1 3.579MHz crystal (X1)
1 57mm 8Ω speaker
1 Electret mic insert
1 DC panel-mount socket to match plug pack
1 3.5mm mono phono socket
2 12V SPDT relay (RLY1, 2)
2 3-way PCB terminal strip
2 2-way PCB terminal strip
1 18-pin IC socket
4 10mm x 3mm screws and nuts
4 self adhesive feet
Light duty hook up wire
Tinned copper wire
Light duty figure-8 cable
Shielded cable

Semiconductors

1 PIC 16F84-04P (programmed with DIALUP.HEX) (IC3)
1 MC145436 DTMF decoder (IC2)
1 LM324 quad op amp (IC1)
2 4N25 opto-coupler (IC4, 5)
3 BC337 NPN transistors (Q4, 5, 6)
2 BC547 NPN transistors (Q1, 3)
1 BC557 PNP transistor (Q2)
1 MTP3055E Power Mosfet (Q7)
4 1N4148 signal diodes (D1, 2, 6, 7)
5 1N4004 power diodes (D3, 4, 5, 8, 9)
1 7805 positive 5V regulator (REG1)
1 5mm Red LED (LED1)
1 5mm Green LED (LED2)

Capacitors

1 2200µF 25VW PC electrolytic
1 1000µF 25VW PC electrolytic
3 10µF 16VW PC electrolytic
1 1µF 16VW PC electrolytic
7 0.1µF MKT polyester
1 .01µF MKT polyester
2 .001µF MKT polyester

Resistors (0.5W, 1%)

1 1MΩ	1 470kΩ	7 47kΩ
1 15kΩ	15 10kΩ	2 560Ω
2 220Ω	1 100Ω	2 47Ω
1 22Ω	1 10Ω	

2 250kΩ horizontal trimpot (VR1, 2)

of adhesive around the insert on the inside of the case and leave overnight to cure.

Once the case has been prepared, install the sockets and mount the PC board in the case with 3mm screws and nuts. An extra nut is placed on the screws between the case and the PC board to act as a spacer.

The power socket and the solenoid socket are wired to the PC board stakes with light duty figure-8 cable. The speaker is wired using light duty hookup wire, while the microphone insert should we wired to the PC board with a short piece of shielded audio cable. Ensure that the shield is connected to the mic insert pin that is bonded to the metal body.

Apply four self adhesive feet to the bottom of the case when finished.

The solenoid

The dimensions of your solenoid assembly may need to be adapted to suit the specific speaker-phone you use. Changes may include such things as the height of the solenoid assembly and the length of the lever and extension arm. The design of the successful prototype assembly was arrived at after quite a bit of experimentation with various solenoids and mechanical arrangements.

Obviously this assembly is optimised for telephones with the speaker button towards the lower edge of the base. In my small survey, I found this to be the most common type.

If the speaker button is in the middle of the base, a different solenoid technique will be required. I'll leave this to your mechanical construction skills.

My experiments with a couple of telephone bases indicated that between 100 and 200 grams of force was needed to depress the speaker button, with a travel of between one and two millimetres.

The specified solenoid when operated at 12V is able to supply this force, however a couple of things need to be taken into consideration to ensure that the assembly will work reliably.

Firstly, the pulling force with all solenoids is reduced the further the plunger is removed from the coil. To obtain the required force for our application, the plunger throw must be no more than 3-4mm.

Secondly, when we connect the plunger to an arm to act as our lever we must ensure that the distance from the button contact point to the pivot is equal to or less than the distance from the pivot to the plunger.

If the button side of the lever is too long, the force available to press the button will be reduced, and may not operate reliably. The prototype solenoid assembly was designed and constructed taking into account these considerations and as a result proved to be very successful.

It would be useless placing the solenoid on the desk next to the telephone without securing it so that it acts against the speaker button.

If it was not anchored the solenoid would simply rise as the lever was moved, and the button would not be pressed. To overcome this problem the solenoid assembly must be screwed to a stand that sits underneath the telephone base.

When the solenoid is energised, the arm now works against the button and full pressure is applied.

Solenoid assembly

The first step therefore is to obtain a piece of 10mm thick timber, such as MDF or particle board and cut it to size so that there is enough space to sit the telephone base and solenoid assembly. The accompanying photographs show the general idea.

There are plenty of options here and you could even stain or paint it a matching colour if you wish.

The solenoid assembly proper is constructed from scrap double sided PC board. While this may seem unusual, this material is easy to work, can be soldered easily and is quite strong.

Fig.3 shows the details of the PC board sections that were used for the prototype. Cut out the sections using a fine tooth hacksaw blade, and file the edges smooth. Drill all the holes and clean away any burrs.

To enhance the appearance of the PC board, clean the copper surface with a plastic kitchen scourer and spray with PC board clear lacquer. When drilling the holes in section C, make sure that the hole for the brass spacer pivot bearing is just big enough to allow the spacer to slide through the lever arm. Don't solder it in place at this stage. A hacksaw mounted with two hacksaw blades should be the right width for the slot in the extension arm (E) so that the lever (C) is a slide fit onto the arm.

Solder the vertical section (A) at 90° to the base piece (B), leaving a 1 to

Two close-up views of the solenoid assembly, made from scraps of PC board (see detail below). Note how the actuator arm can be set to the precise position required for reliable action on your particular phone.

Solenoid Assembly

- 1 12V DC solenoid (Jaycar SS-0901)
- 1 3.5mm mono jack socket
- 2 3.5mm mono jack plug
- 1 3mm x 12mm screw and nut
- 2 3mm x 4mm screws
- 1 12mm long brass spacer (hole clearance for 4mm screw)
- 1 4mm x 20mm screw and nuts
- 3 No 6 x 10mm self-tapping screws
- Light duty figure 8 cable
- Scrap double sided PC board, approx 60mm x 160mm
- 10mm thick stand (Pine, MDF or plywood), size to suit telephone base

2mm gap from the edge of the base. This is best done by firstly spot soldering and checking for square, and when satisfied, running a fillet of solder on both sides of the joint.

Mount the solenoid with the two 3mm x 4mm long screws, and also install the 4mm x 20mm screw onto the pivot hole in section (A). Tightly screw on a nut to hold the pivot screw in position. Solder the 4mm nut with a spot of solder between two faces of the nut and the PC board to stop it loosening. Slide the spacer into the lever and place onto the pivot screw, with the 3mm hole in the lever closest to the upper edge. Enlarge the plunger hole with a 3mm drill and then slide it into the solenoid housing. Move the lever up into the plunger slot and slide a 3mm screw through the holes in the plunger and lever. Test the lever for free movement.

Screw a nut onto the pivot screw to prevent the spacer from moving sideways, but still letting it rotate freely. If the spacer is too long and you are unable to screw on the 4mm nut completely, you will need to file the end of the spacer a little until it fits. Now slide the lever arm along the spacer until it is inline with the plunger slot and parallel with the vertical section. Once this position is found, carefully disassemble and solder the lever to the spacer, being careful not to get solder inside the spacer hole.

Reassemble and ensure that the lever and plunger can move freely. You may need to loosen the screws holding the solenoid and rotate it slightly to let the plunger move freely. Tighten the screws again, once the correct position is found.

When satisfied, spot solder the outer 4mm nut to the pivot screw and a nut onto the plunger/lever screw to stop them unscrewing due to vibration.

Solder the stopper section (F) under the lever arm at the plunger end and check that there is 3-4mm of plunger travel available.

Solder in the triangular brace section (D) to strengthen the assembly, again with a fillet of solder along each edge. Install a 3.5mm mono jack socket in the remaining hole in the vertical

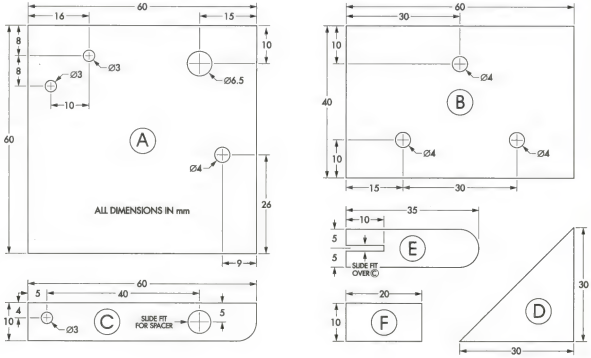

Fig.4: detail of the solenoid mounting assembly, using scraps of double-sided PC board.

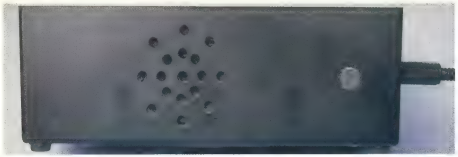

Use this side-on shot as a guide to drilling the speaker and microphone holes.

section above the lever. Shorten the solenoid coil wires and solder them to the socket with either polarity, so that they are away from the lever. If you temporarily apply 12V DC to the solenoid, the lever arm should move up with a sharp 'click' when power is applied and release smoothly when the power is removed.

Place your telephone base on the stand and the solenoid in front of the speaker button.

Slide the extension arm section (E) onto the lever arm. Move the assembly so that the extension arm is above and almost resting on the speaker button with the lever arm in the normal position (lever resting on stopper section). Mark the position and screw the assembly to the stand with three self-tapping screws.

Note the position of the extension arm, move the telephone base aside, and spot solder the extension arm to the lever arm.

Place the telephone back into position and using the 12V DC supply operate the solenoid and check that the speaker button operates correctly. That is, when the solenoid is energised, the telephone goes off-hook and you can hear dial tone and when it is operated again the telephone goes on-hook. Adjustments can be made to the extension arm position by melting the spot solder with an iron, moving the arm to the new position and allowing it to cool.

Once you are satisfied that all is OK, solder the extension arm permanently to the lever arm. In normal operation, power for the solenoid comes from the main PC board, so you will need to fabricate a cable to connect the solenoid to the socket on the case. This is simply a short length of figure-8 cable fitted with a 3.5mm jack plug on both ends.

Initial testing

Once construction is complete, it is time to apply power to the circuit. Leave the solenoid unplugged at this stage.

Connect the plug pack to the DC socket, and using your multimeter measure the voltage at the power supply socket (between + and 0V). This should be somewhere between 12V and 17V. Leave your black test lead connected to 0V and measure the voltage at the junction of D8 and D9, which should be around 0.6V less and finally at the input to REG1 which should be 0.6V lower again.

Next measure the voltage at the output of REG1. You should read close to 5V and you should also read the same voltage at pin 14 of the PIC socket. About 2V should be read at pin 2 of IC1. If you don't get these readings or fairly close to them, remove the power source quickly and look for errors, especially with the power wiring and the installation of the polarised components.

When you are satisfied that the power supply is correct, adjust the two trimpots halfway and whistle into the microphone. The ring LED (LED1) should turn on, then go off when you stop whistling. If it doesn't turn on, there is a problem with the audio input circuit. Note that the DTMF LED (LED2) should not turn on at this stage. You should be able to trace any problems in the audio circuits with a multimeter and an audio monitor amplifier.

Once done, remove the power, wait a few seconds and insert the programmed PIC chip into the 18-pin socket. Apply power again and after a second you should hear the power up beep in the speaker. This beep is good news, because the PIC has powered up successfully.

The 5V power rail takes some time to fall away after power is removed, so you must wait a few seconds between powering off and on to allow the reset circuit to work properly.

If you don't hear the beep, you have a problem. This may simply be in the speaker circuit or maybe the clock input from IC2.

If you suspect the oscillator is at fault, the best approach would be to check for the 447kHz clock signal at pin 16 of IC3 with a frequency counter. If you cannot make a reading, then the DTMF decoder (IC2) or the crystal is probably at fault.

Default password

When the unit is powered for the first time the password is unknown. Because we can only access the unit by entering in a correct password, we need a backdoor method so that we can get in and program our own.

To do this, remove the power, apply a short between the password pins, wait a few seconds and reconnect the power. The power up beep will be heard again and after 10 seconds remove the

Table 3: Resistor Colour Codes

No.	Value	4-Band Code (1%)	5-Band Code (1%)
1	1MΩ	brown black green brown	brown black black yellow brown
1	470kΩ	yellow violet yellow brown	yellow violet black orange brown
7	47kΩ	yellow violet orange brown	yellow violet black red brown
1	15kΩ	brown green orange brown	brown green black red brown
15	10kΩ	brown black orange brown	brown black black red brown
2	560Ω	green blue brown brown	green blue black black brown
2	220Ω	red red brown brown	red red black black brown
1	100Ω	brown black brown brown	brown black black black brown
2	47Ω	yellow violet black brown	yellow violet black gold brown
1	22Ω	red red black brown	red red black gold brown
1	10Ω	brown black black brown	brown black black gold brown

Table 4: Capacitor Codes

Value	IEC code	EIA code
0.1uF	100n	104
.01uF	10n	103
.001uF	1n	102

short on the pins. The password tone will be then heard indicating that the default password has been set to 123456 and stored in EEPROM. Turn off the power again.

If, in the future, you forget your password, you can invoke the default password in the same way. Note that as a security precaution, you can only do this when you are physically at the unit and not from a remote location.

On-hook detection

Imagine that we make a call to the Phonome and it answers by operating the telephone speaker button but during the call the power goes off. When the power comes back on the Phonome powers up, goes to idle and waits for ring. It does not know that the telephone call is still off-hook. This means that ring will not be heard and in any case no one can call this telephone because it will be busy.

To overcome this potential problem, a special process is invoked each time the Phonome powers up to determine whether the telephone is on or off-hook. We can tell when a hands free telephone is on-hook because there is no sound from the speaker, however when we press the speaker button and go off- hook we hear dial tone until the exchange times out.

The Phonome uses this method to determine whether the telephone is off or on hook, and also if the telephone and line are working. We will look at the normal situation first.

When the Phonome powers up, the solenoid is automatically operated and after a 2 second settling time, the ring output (Q1 collector) is monitored.

If dial tone is present and VR2 is adjusted correctly, the ring output will be low. It is monitored for a further two seconds and if it is continuously low for this period the Phonome considers this to be the off -hook state. It then operates the solenoid again to go onohook and wait for a call. There are however, two situations where the ring output may not be low for two seconds after operating the solenoid following a power up.

Firstly, the power up of the Phonome may have taken place with the telephone already off-hook, as discussed above. In this situation operating the solenoid at power up will place the telephone on-hook and so no dial tone will be heard.

To check if this is the case the Phonome firstly waits five seconds, operates the solenoid and looks for dial tone again. If dial tone is found this time, the telephone must now be off- hook. The Phonome operates the solenoid, returning the telephone to on- hook and waits for ring.

The second situation is if there is a line fault. With a line fault we are not going to get dial tone no matter how many times we operate the solenoid.

As there is little use in continually cycling the solenoid for extended periods if the line is faulty, the Phonome will only try for dial tone four times in a row. If after four attempts dial tone is still not detected, the Phonome stops and waits for 10 minutes before trying another sequence of four attempts. Note that no calls will be answered until the 10 minute period has elapsed and the next search for dial tone has been successful.

Special features

Using a microcontroller in a design allows some nice features to be included that would otherwise be difficult to do. In this case two very useful diagnostic features, a DTMF decoder checker and a ring training function are included. Both these features are accessed through shorting the password pins for set periods at power up.

DTMF decoder checker

The DTMF decoder checker allows you to ensure that the input circuit including the microphone and the DTMF decoder are operating correctly.

To access the DTMF decoder checker, apply power with the password pins shorted and release the short within five seconds. A short beep will be heard and each time a DTMF sequence is decoded a sequence of beeps equal to the value of the key will be heard.

For example if the key '1' is pressed one beep will be heard and if the '7' key is pressed seven beeps will be heard and so on. Trimpot VR1 varies the sensitivity of the input amplifier and is adjusted while monitoring LED2 so that it turns on when each DTMF digit is heard.

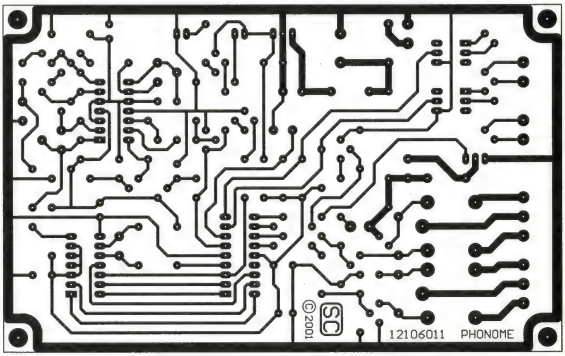

Full-size artwork of the Phonome PC board for those who like to make their own. It can also be used to check commercially-made boards for defects

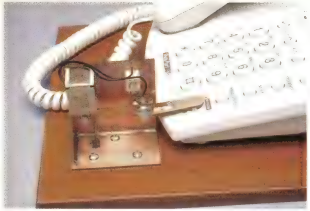

Here's a close-up showing how the solenoid extension arm pushes down on the "speaker" button of the phone. Only loudspeaking phones with this type of button can be used.

Power must be removed to end DTMF checking.

Ring training

The input circuit provides a digital signal to the PIC chip, which is low when a burst of ring is heard by the microphone, and high when there is no ring.

The software within the PIC measures the length of the low and high periods of the ring signal. These are then compared with reference values stored in the EEPROM to determine if it is ring or some other repetitive noise which can be ignored.

These EEPROM values are set to default values for standard Australian ring when the default password procedure is done.

There may be situations where the particular ring that is heard from your telephone is not close enough to the default values to be considered valid ring. This could be due to variations in the exchange you are connected to, or the electronics in the telephone etc.

To allow the Phonome to detect almost any ring signal, we can enter a 'training' state so that the ring on and off times can be read and stored.

This is done by powering on the Phonome with the password pins shorted for longer than five seconds but less than ten seconds, where two beeps will be heard.

Now sit the unit near the telephone and ring your home from your mobile or get someone else to ring you. Watch LED1 and check that it flashes in time with the bursts of audible ring. If not, adjust trimpot VR2 until it does.

When you are ready, wait for a period of silence in between ring bursts and then quickly short the pins and take the short off before the next ring burst. Another two beeps will be heard indicating that training is now in progress. The PIC waits until it has detected a burst of ring between 400mS and one second before proceeding. It then waits for the start of the following burst of ring and measures the on and off ring periods for the next six seconds. At the completion of the six second period continuously repeating beeps will be heard and the new ring values will be stored in EEPROM. This rather involved procedure is to try and ensure that two periods of good ring are stored. You will need to turn off the power to stop the beeps and exit ring training.

Final testing

Perform the default password programming operation, if you haven't already done so. Place the telephone base on the stand with the speaker button under the solenoid lever arm. The case should be placed so that the microphone is close to the telephone speaker and the Phonome speaker is close to the telephone microphone. Obviously there are limitations to this, and the unit should still work if you cannot get them real close.

Remember that the further they are apart, the more echo and noise will be picked up by the microphone. It is also important to adjust the volume control on the telephone base to the correct level. It must be set so that the level is above the background noise but not so loud that the tones are distorted.

There is plenty of gain range adjustment in the input circuit, and the DTMF decoder chip has a large dynamic range, so there is no need to have the telephone level too high.

If you do have trouble with the detector working reliably, it will probably be due to distorted DTMF tones through over driving the telephone speaker rather than too low a level.

Plug the solenoid cable into the solenoid socket and the plug pack into the power supply socket on the case. Apply power and you will be greeted again with the power up beep. Following this you should see the solenoid operate searching for dial tone. If everything is OK, dial tone should be heard for two seconds, LED1 should be on and then the solenoid will operate again returning the handset to the on hook state. If the LED does not come on, then you will need to adjust VR2.

Using your mobile phone, or obtaining the help of a friendly next door neighbor, call your number and check that LED1 turns on when the bursts of ring can be heard. If the ring detection values in the PIC are correct, the solenoid should operate to answer the call. After the solenoid has operated, you should hear 20 short beeps of tone. From the moment the beeps stop you have three seconds to enter a password digit. If any of the password digits are not entered within three seconds of the last, the call will be cancelled. If you enter 6 digits within time but the password is wrong, an error tone will be sent and one more attempt is allowed. If the second attempt fails the call is cancelled immediately. At this stage enter the default password, 123456. You should see LED2 turn on as each digit is received. If not, you may need to adjust VR1 and try again. You may find it necessary to hold down the keys on the telephone a little longer than normal and enter the digits slowly to obtain reliable DTMF detection under some circumstances.

Once the password is accepted you will hear a connected tone of three beeps. At this point you have three minutes to enter a command. If no commands are entered a reminder tone is sent each minute, and if three minutes have elapsed since the last digit was received the call is cancelled.

You may at this stage wish to refer to the keys and the corresponding commands in Table 1, and the tones in Table 2. It would be a good idea at this stage to set your own password, so that a level of security is provided. To do this press the '*' key on your handset. You will then hear the password tone sequence. Enter the new password, and after the sixth digit is entered the password tone is sent again and the new password is stored in EEPROM. If you timeout during this process, the error tone is sent and the old password is restored.

An added bonus with the Phonome is that you can listen to what is happening inside the room where it is located. If you were, for example turning on a

radio or television in the room, you would be able to check that it indeed did come on.

Inputs and outputs

Press the '1' key and you should hear a single beep followed by a two-beep rising frequency tone indicating output 1 is on. Relay 1 should have energised at this point. Now press the '2' key. You should now hear a single beep, followed by a single low frequency tone indicating output 1 is off, and relay 1 should now be de-energised. Relay 2 operates the same way using the '3' and '4' keys, except that 2 beeps will initially be heard to indicate relay 2.

Press the '5' key. You should hear a single beep followed by a single low frequency tone indicating that input 1 is off. Connect a DC supply of around 5V to the input 1 terminal strip, ensuring correct polarity. Press '5' again and you should hear a single beep followed by a two-beep rising frequency tone indicating output 1 is on. Input 2 operates the same way, except that two beeps will initially be heard indicating input 2.

If you now press the '9' key, you should hear the error tone. Anytime an unrecognised digit is received the error tone is returned and no action is taken. To end the call, press the '#' key twice in a row. The end tone will be heard, the solenoid will operate and the call will be terminated.

Screw the cover onto the box and the Phonome is ready for action.

Finally

To conclude, here are a few final comments and tips to help you get the most from your Phonome. As mentioned before the mechanical construction of the stand and solenoid assembly will really depend on the telephone base you use and your individual requirements. For example, you may want to include some form of seating for the telephone so that it does not move around, and you may also want to encase the solenoid assembly with a cover to tidy it up a little.

The relays (RLY1 and RLY2) are small 12V SPDT types that are only intended to switch low voltages. If you want to operate mains devices, then use these outputs to control larger isolated mains rated relays. The opto-coupler inputs are designed to interface with logic outputs that can supply around 5mA of current. If you intend to interface to high voltage lines, you may need to include an additional external resistor in series with the opto-coupler LED circuit to limit the input current. While higher currents can be tolerated, including the extra resistor to limit the current to around 5 to 10mA would be safe practice.

If you want to test your Phonome offline without making telephone calls, this is simple to do. Instead of the need for ring and dialtone from the telephone, you can simulate these sounds by whistling into the microphone. The ring detector input circuit cannot distinguish the frequency of tones, only audio level, so a constant whistle will suffice. To get the ring detector to work you need to be fairly accurate with your whistle, however the two 400ms bursts can be simply combined into a single 1-second burst.

If you unplug the telephone from the wall socket and connect the telephone line plug to a 12V DC supply, you can test the DTMF checker without needing to make telephone calls. After pressing the speaker button, the DTMF tones will be heard from the telephone speaker as the keys are pressed.

Software

To fully explain how the software works would take an article on is own. The best approach is to download the Phonome files from the SILICON CHIP Web site combined in a zip file DIALUP.ZIP. To program your own PIC chip you will need the file DIALUP.HEX, while you can get a better understanding of how it works by reading the DIALUP.ASM file. **SC**

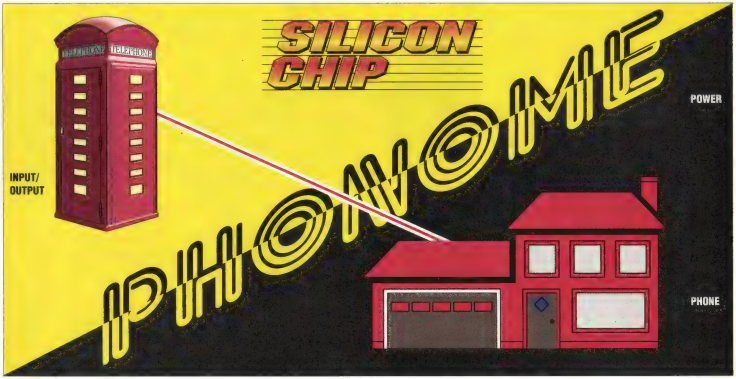

Full-size artwork for the Phonome fron panel. This suits the zippy box specified in the parts list.

SILICON CHIP REFERENCE

GREAT BOOKS FOR

AUDIO POWER AMP DESIGN HANDBOOK
By Douglas Self. 2nd Edition Published 2000
From one of the world's most respected audio authorities. The new 2nd edition is even more comprehensive, includes sections on load-invariant power amps, distortion residuals, diagnosis of amplifier problems, and much more. 368 pages in paperback.

$85

INDUSTRIAL BRUSHLESS SERVOMOTORS
By Peter Moreton. Publ. 2000
Designed as a guide for professionals and a module text for electrical and mechanical engineering students. A step-by-step approach covering construction, how they work, how the motor behaves and how it is rated and selected. It may only be a small book but it has outstanding content! 186 pages in hardback.

$99

VIDEO SCRAMBLING AND DESCRAMBLING for Satellite & Cable TV by Graf & Sheets
If you've ever wondered how they scramble video on cable and satellite TV, this book tells you! Encoding/decoding systems (analog and digital systems), encryption, even schematics and details of several encoder and decoder circuits for experimentation. Intended for both the hobbyist and the professional. 290 pages in paperback. **NEW 2nd Edition 1998**

$65

AUDIO ELECTRONICS
By John Linsley Hood. First published 1995. Second edition 1999.
This book is for anyone involved in designing, adapting and using analog and digital audio equipment. It covers tape recording, tuners and radio receivers, preamplifiers, voltage amplifiers, audio power amplifiers, compact disc technology and digital audio, test and measurement, loudspeaker crossover systems, power supplies and noise reduction systems. 375 pages in soft cover.

$85

TCP/IP EXPLAINED
By Philip Miller. Published 1997.
Assumes no prior knowledge of TCP/IP, only a basic understanding of LAN access protocols, explaining all the elements and alternatives. Combines study questions with reference material. Examples of network designs and implementations are given. 518 pages, in paperback.

SORRY, SOLD OUT

$99

THE CIRCUIT DESIGNER'S COMPANION
By Tim Williams. First published 1991 (reprinted 1997).
Includes grounding, printed circuit design and layout, the characteristics of practical active and passive components, cables, linear ICs, logic circuits and their interfaces, power supplies, electromagnetic compatibility, safety and thermal management. 302 pages, in paperback.

$65

LOCAL AREA NETWORKS: An Introduction to the Technology
By John E. McNamara. 2nd edition 1996.
Want to become more familiar with local area networks (LANs) without facing the challenge of a 400-page text? . Gives familiarity with the concepts involved and provides a start for reading more detailed texts. 191 pages, in paperback.

$69

ELECTRIC MOTORS AND DRIVES
By Austin Hughes. Second edition published 1993 (reprinted 1997).
For non-specialist users – explores most of the widely-used modern types of motor and drive, including conventional and brushless DC, induction, stepping, synchronous and reluctance motors. 339 pages, in paperback.

$65

EMC FOR PRODUCT DESIGNERS
By Tim Williams.
First published 1992. 2nd edition 1996.
Widely regarded as the standard text on EMC, this book provides all the information necessary to meet the requirements of the EMC Directive. It includes chapters on standards, measurement techniques and design principles, including layout and grounding, digital and analog circuit design, filtering and shielding and interference sources. The four appendices give a design checklist and include useful tables, data and formulae. 299 pages, in soft cover.

$99

ESSENTIAL LINUX
By Steve Heath. Published 1997.
Provides all the information and software that is necessary for a PC user to install and use the freeware Linux operating system. It details, setp-by-step, how to obtain and configure the operating system and utilities. It also explains all of the key commands. The text is generously illustrated with screen shots and examples that show how the commands work. Includes a CD-ROM containing Linux version 1.3 and including all the interim updates, basic utilities and compilers with their associated documentation. 257 pages, in paperback.

$85

BOOKSHOP

ENQUIRING MINDS!

ALL PRICES INCLUDE GST

WANT TO SAVE 10%?
SILICON CHIP SUBSCRIBERS AUTOMATICALLY QUALIFY FOR A 10% DISCOUNT ON ALL BOOK PURCHASES!
(To subscribe, see page 85)

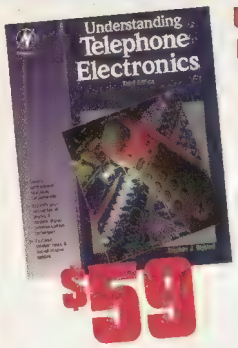

$59

UNDERSTANDING TELEPHONE ELECTRONICS

By Stephen J. Bigelow.
Third edition published 1997 by Butterworth-Heinemann.

A very useful text for anyone wanting to become familiar with the basics of telephone technology. The 10 chapters explore telephone fundamentals, speech signal processing, telephone line interfacing, tone and pulse generation, ringers, digital transmission techniques (modems & fax machines) and much more. Ideal for students. 367 pages, in soft cover.

$69

SETTING UP A WEB SERVER

By Simon Collin. Published 1997.

Covers all major platforms, software, links and web techniques. It details each step required to choose, install and configure the hardware and software elements, create an effective site and promote it successfully. 273 pages in paperback

SORRY, SOLD OUT

GUIDE TO TV & VIDEO TECHNOLOGY

By Eugene Trundle. First published 1988. Second edition 1996.

Eugene Trundle has written for many years in *Television* magazine and his latest book is right up to date on TV and video technology. The book includes both theory and practical servicing information and is ideal for both students and technicians. 382 pages, in paperback.

$59

DIGITAL ELECTRONICS – A PRACTICAL APPROACH

By Richard Monk. Published 1998.

With this book you can learn the principles and practice of digital electronics without leaving your desk, through the popular simulation applications, EASY-PC Pro XM and Pulsar. Alternatively, if you want to discover the applications through a thoroughly practical exploration of digital electronics, this is the book for you. A free floppy disk is included, featuring limited function versions of EASY-PC Professional XM and Pulsar. 249 pages, in paperback.

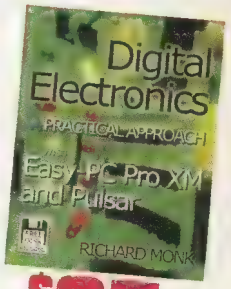

$65

SILICON CHIP'S ELECTRONICS TEST BENCH

First published 2000

A collection of the "most asked for" Test Equipment projects and features from the pages of Australia's "most asked for" electronics magazine. Exceptional value at $13.20 (Aust); $A15.95 NZ (prices incl. p&p)

SILICON CHIP'S COMPUTER OMNIBUS

First published 1999

Hints, tips, Upgrades and Fixes for your computer from articles published in SILICON CHIP in recent years. Covers DOS, Windows 3.1, 95, 98 and NT. A must for the computer user. $12.50 (Aust); $A15.96 NZ (prices include GST)

ORDER HERE

☐ AUDIO POWER AMPLIFIER DESIGN	$85.00
☐ INDUSTRIAL BRUSHLESS SERVO MOTORS	$99.00
☐ VIDEO SCRAMBLING/DESCRAMBLING	$65.00
☐ LOCAL AREA NETWORKS	$69.00
☐ THE CIRCUIT DESIGNER'S COMPANION	$65.00
☐ ELECTRIC MOTORS AND DRIVES	$65.00
☐ UNDERSTANDING TELEPHONE ELECTRONICS	$59.00
☐ AUDIO ELECTRONICS	$85.00
☐ GUIDE TO TV & VIDEO TECHNOLOGY	$59.00
☐ EMC FOR PRODUCT DESIGNERS	$99.00
☐ DIGITAL ELECTRONICS	$65.00
☐ ESSENTIAL LINUX	$85.00
☐ SILICON CHIP TEST BENCH	$10.95
☐ SILICON CHIP COMPUTER OMNIBUS	$10.95

ORDER TOTAL: $.....

TAX INVOICE

Your Name_____

Address _____ (PLEASE PRINT)

_____ Postcode_____

Daytime Phone No. (_____) _____ (STD)

Email_____@_____

❑ Cheque/Money Order enclosed *OR*

❑ Charge my credit card – ❑ Bankcard ❑ Visa Card ❑ MasterCard

No: | | | | | | | | | | | | | | | |

Signature_____Card expiry date | | | / | |

PLUS P&P (if applic): $..... TOTAL$ AU.....

P&P Orders over $100 P&P free in Australia. AUST: Add $A5.50 per book. NZ: Add $A10 per book, $A15 elsewhere

POST TO: Silicon Chip Publications, PO Box 139, Collaroy NSW, Australia 2097.
OR CALL (02) 9979 5644 & quote your credit card details; or **FAX TO** (02) 9979 6503

ALL TITLES SUBJECT TO AVAILABILITY. PRICES VALID FOR MONTH OF MAGAZINE ISSUE ONLY. ALL PRICES INCLUDE GST

MAILBAG

A restricted electrical licence is still a licence

I noticed that in your April 2001 editorial you stated ". . . it is now illegal for anyone in Queensland to assemble or repair a mains-powered project or appliance unless they are a licensed electrician." I question whether this statement, as many others made by yourself and various readers in this argument, is correct.

As far as I understand the situation, for a person, in Queensland, to conduct work on portable 240V equipment – that is, equipment connected by a flexible lead to a general supply outlet – they are only required to hold a Restricted Electrical Licence and not a full electrical ticket, as stated in your editorial.

The course work of the Restricted Licence only focuses on the work practices and wiring standards required to safely work on 240V/10A portable equipment and falls quite short of the material covered by a full electrical qualification. For example, the Restricted Licence does not cover fixed wiring installation, three phase circuits, connections to switchboards, etc.

Electrical safety and not our egos should be paramount in our minds, regardless if we are professionals working within the electrical/electronics industry or as home hobbyists. We all have a responsibility under "Duty of Care" legislation to ensure that any work undertaken is conducted and left in a safe manner, not just for our own sake but also for those who may follow after us.

R. Stephen Toms,
via email.

Comment: we really think you are splitting hairs. A restricted licence is still a licence. The point is that hobbyists or technicians repairing TVs or photocopiers cannot legally do any work on mains-powered devices. This is stupid.

Slam-dunked by the bureacracy

A colleague has passed me the "Publisher's Letter" from the April 2001 edition of your magazine. It is not my intention to participate in your debate but hopefully tailor your efforts so that a useful result may emanate from the ground swell of opinion you are attempting to coordinate.

Firstly, the advice about the review of electrical legislation and regulation by the National Competition Council is correct. In most States the reviews have been completed. Whilst the review has resulted in change, eg, the ACT Government moving to align its licensing legislation with NSW legislation, the NCC has not found the legislation requires amendment for reasons of any anti-competitive nature.

As you would expect, yours is not the first such campaign and yet the legislation still imposes restrictions beyond what you deem is reasonable. Accordingly, it must be reasoned that:

- there are facts that prove your statements to be inaccurate; or
- Governments expect proposals of substance if they are to change legislation, not merely your bold statements like "we do not think there will be an increase in deaths . . ." and "we expect overall safety to improve because the various electrical authorities will be forced to carry out education campaigns on how wiring should be done . . .".

Rather than taking lightweight swipes at the Government with unresearched generalisations, some facts would assist your case.

With regard to your petition, one must ask what you reasonably expect to achieve. Whilst ever there is an unsafe product such as electricity, there will be legislation controlling its use. Accordingly, you need to identify your desired outcome, the process needed to achieve it and then the resources to back it up, As it stands you are merely disseminating half truths and encouraging ill-informed debate.

Legislation must be drafted in a manner that accommodates the technology, the way business is done and the consumer requirements. To this end, we agree the legislation must be facilitative and practical. However, your approach is unfortunate and in our view, does not assist achieve a responsive regulatory environment, let alone the changes you claim you want.

If your intention was merely to create a subject for discussion in your magazine, then you have been successful. However, if you intend to achieve change that benefits the community, then you need to support the rhetoric with some fact. Then you can feel that you have made a meaningful contribution to the debate.

Peter Glynn, Secretary,
National Electrical And Communications Association,
Melbourne, Vic.

Comment: the aforesaid reviews in the bigger states have yet to be done. If you refer to practices around the world, you would know that New Zealand, the UK and many other countries permit home-owners to do their own wiring and still manage to have much lower fatalities than in Australia.

Concern about insurance premiums

I read with interest about the legislation that you are trying to change about people being able to legally do their own house wiring and repairs to electrical appliances. That's all very well for those of us who might know what we are doing. What about the bloke who knows nothing about electricity and earthing and all the other dangers that go with it?

What worries me most is what the insurance companies will do. Home insurance premiums won't go down will they? And what about the jobs lost by electricians, contractors and repair people? It is my will that the law should stay the way that it is.

R. Mitchell,
West Lindfield, NSW.

Comment: we believe that the New Zealand legislation which carries a requirement for subsequent inspections will answer any concerns about safety and insurance matters. After all, most developed countries do allow home wiring and they do not have high fatalities or high premiums. In fact, as noted in one of the letters on this subject in the May 2001 issue, Australia has one of the highest fatality rates (and these are not due to home wiring).

Jaycar ELECTRONICS JUNE SALE

Prices valid to end June 2001

As easy as ordering a pizza! TECH HOTLINE 1800 022 888 WWW.JAYCAR.COM.AU

FANTASTIC CAR SUPER TWEETER DEAL

NEW

We have made an amazing scoop purchase of a quantity of Car Super Tweeters. They have a large magnet assembly, on board crossover capacitor and are pre wired for easy connection.These are supplied as pictured, with a foam gasket on the front, (which is easily removed). There is no other mounting hardware supplied, but at the price, who cares! Mount them anywhere with double sided tape, or in vents, A pillars, rear pillars, home theatre, anywhere where you need more treble. These sound just as good as our $65pr super tweeters. We would expect these to sell for around $25 each. Cat CS-2218

$7.95ea

10+ $6.50ea
100+ $5.50ea

Super Bright LED Keyring Torches

NEW

These little gadgets are so good that everyone in the office bought one! They use a high brightness LED and draws very little power, but produces an amazing amount of light for their size.

ST-3046 Yellow $9.95 ST-3047 Blue $14.95
ST-3048 White $14.95 ST-3049 Green $14.95

NEW DIGITAL MULTIMETERS

30 RANGE DMM

See cat. P28 for full specs. Features include:•Probe Lockout •Shutters •Backlight •Temperature •Capacitance •Extra Large Display •Data Hold •Continuity Buzzer •Holster Included •Low Battery Indicator

Cat. QM-1301 **$69.95**

FREQUENCY DMM

See cat. P29 for full specs. Features Include: •Probe Lockout Shutters •Backlight, •Temperature •Capacitance •Frequency •Extra Large Display •Data Hold •Continuity Buzzer •Holster Included •Low •Battery Indicator

Cat. QM-1321 **$85**

AUTORANGING DMM

See cat. P30 for full specs. Features Include: •Probe Lockout Shutters •Slow Decay Backlight •Auto Ranging •Temp •Capacitance •Frequency •38 segment •Bargraph •3999 Count •Clamp Meter Range •Data Hold •Continuity Buzzer•Holster •Low Battery Indicator

Cat. QM-1531 **$99.95**

DOUBLE INSULATED AUTO RANGING DMM

See cat. P29 for full specs. Feature Include: •3.75 Digit •Slow Decay Backlight •Frequency •Auto Power Off •Continuity Buzzer •Relative Measurement •3999 Count •Capacitance •Auto Ranging •Data Hold •Low Battery Indicator •Duty Cycle Measurement

QM-1540 **$89.95**

AC/DC CLAMP METER DMM

See cat. P32 for full specs. •200A AC/DC •Frequency •Capacitance •Auto Ranging •Auto Power Off •Data Hold •One Touch Zero Function •Duty Cycle Measurement •Continuity Buzzer •Carry Case Included •4000 Count

Cat. QM-1562 **$159**

DIGITAL LUXMETER

See cat. P38 for full specs. •LCD Display •3 Ranges •Data Hold •Carry Case •Seperate Photo Detector

Cat. QM-1585 **$99**

Plasma Tube

NEW

LIGHTNING IN A TUBE! This decorative lamp emits a multitude of ever changing, bluish-purple lightning bolts from the centre to the side. When you touch the glass the lightning is attracted to your fingers. The lamp features an on board microphone which can be used to make the lamp respond to voice and/or music. The plasma tube is 60mm in diameter and stands 550mm tall. Mains to 12VDC power adaptor included. Cat. SL-2971

$99

Super Bright 3 LED "White" Torch

NEW

This headlight torch is fantastic! It weighs just 62 grams (with batteries) and uses 3 ultra-bright LEDs to give an amazing amount of bright, nicely diffused white light. A tough, 360 degree swivel ball mount clip attaches to the elastic head strap or it can be clipped to your belt, baseball cap, wristwatch strap. LEDs require much less power than ordinary globe and will run for ages on the 3 x AAA batteries (included).

Cat. No. ST-3058
1 LED VERSION AVAIL
Cat. ST-3057 $19.95

ONLY $29.95

FANTASTIC NEW RANGE OF ELECTRICALLY ISOLATED INVERTERS

Isolated inverters means that they have dielectric insulation between the 12VDC primary and the high voltage (AC) secondary. This means that there is no path for the 240VAC to appear at the battery bank terminals. The reason for this, of course is safety! All 12VDC input unless indicated.

140W - 450W Surge
Cat. MI-5060
$109.50

300W - 900W Surge
Cat. MI-5062
$159.50

400W - 1200W Surge
Cat. MI-5064
24V 400W VERSION MI-5065 $199.50
$199.50

600W - 1500W Surge
Cat. MI-5066
$299

800W - 2000W Surge
Cat. MI-5068
$389

1000W - 2400W Surge
Cat. MI-5070
$529

1500W - 3000W Surge
Cat. MI-5072
$749

SAVE

SENNHEISER HD56 HEADPHONES

NEW

These high quality mini headphones are the perfect way to upgrade those tinny sounding ear-bud style types that come with many types of portable audio gear. They offer very good sound quality that rivals many larger type headphones and an adjustable headband for good fit. Supplied with 1.2m of OFC cable terminated with a 3.5mm stereo plug and 6.5mm adapter. •Frequency response: 20 - 20000Hz •Impedance: 32Ω •Transducer: Dynamic open back. Cat. AA-2040

$49.95

SENNHEISER HD433 HEADPHONES

These headphones offer true Hi Fi performance for a reasonable price. They are an open back style with "Supra-aural" type ear pads meaning that they sit on the ear rather than around or in them for greater long term comfort in hot weather and more open sound quality with none of the "boxed-in" quality of closed back style 'phones. Their low 32 ohm impedance makes them easy to drive to high levels, even from portable CD players etc. They come supplied with 3m of OFC cable terminated with a 3.5mm stereo plug and 6.5mm adaptor. Come into any of our stores for a demo. •Freq. Resp: 20Hz-20kHz •Impedance: 32Ω •Transducer: Dynamic open back. Cat. AA-2042

$79.95

EQUATOR FULL FUNCTION CAR ALARM WITH REMOTE PAGER

NEW

All the features of our standard alarm, but with a pager. The alarm can send a message to your key fob remote. If the alarm is suitably wired, you can command the alarm to sound the siren, flash the lights and kill the engine.

What you get:
- Blackbox electronic module
- 2 transmitter key fobs
- Ignition cut out relay
- Shock sensor • Wiring • Mini Size Siren
- Backup battery
- See catalogue P183 for details. Cat. LA-8960

$399.50

01 CATALOGUE OUT NOW
8 PAGES - FULL COLOUR
NLY $2.95 - CALL NOW

OVERNIGHT DELIVERY

KNIGHTSBRIDGE

OVERNIGHT DELIVERY

MAILORDERS - FREECALL FOR PHONE ORDERS - 1800 [illegible]

433MHZ WIRELESS STEREO HEADPHONES

Features range of up to 50m. See Cat. page 226 for details. Cat. AA-2000

Was $109 SAVE $24 **$85**

NOISE CANCELLING HEADPHONES

Cat. AA-2024

Was $79.95 SAVE $10 NEW **$69.95**

THE ELECTROSTATIC LOUDSPEAKER DESIGN & CONSTRUCTION

See '00 Cat. page 274 for details.

Cat. BA-1406 **Was $49.50** SAVE $15 **$34.50**

BULLOCK ON BOXES

See '00 Cat. page 274 for details.

Was $30.95 SAVE $11 **$19.95**

Vifa P17WJ 6.5" WOOFER

As used in our 3 way JV60 speaker kits. See Cat. page 207 for full details. Cat. CW-2106

Was $99 SAVE $15 **$84**

Vifa D19 SCREENED DOME TWEETER

Power handling 100WRMS. Vifa sound quality. See Cat. P203 for details. Cat. CT-2018

WAS $49.95 SAVE $10 NEW **$39.95**

RESPONSE Dome Tweeter

See Cat. page 203 for details. Cat. CT-2010

Was $26.95 SAVE $7 **$19.95**

ORTOFON MAGNETIC PHONO CARTRIDGE NEW

Looking to replace your old worn out cartridge and stylus or bring your turntable and LP records out of retirement?

This great new OMB5 cartridge from ORTOFON of Denmark is the answer. Features standard 13mm (1/2") mounting centres to fit all tonearms/headshells. This stylus is a quality elliptical diamond for long life and low record wear that tracks at 1.5 - 2.0 grams. When its time to buy a new one simply replace the complete cartridge as the stylus itself costs about the same. Offering unprecedented sound quality for the price.

Not suitable for DJ scratching use. Cat. AM-4020

Only $45

1MW LASER MODULE

See Cat. P267 for full details. Cat. ST-3115

SAVE $3 WAS $13.95 **$10.95**

Please check by phone first to ensure our new products are actually in stock before driving across town.

Vifa D25AG 25mm DOME TWEETER

As used in our Vifa JV60 speaker kits. See Cat. page 203 for full details. Cat. CT-2020

Was $69.95 SAVE $10 **$59.95**

CHECK OUT OUR NEW LOOK WEBSITE AT www.jaycar.com.au

No credit card, No worries! Our web site now accepts Technocash.

See our website for full details TECHNO CASH

6P / 8P MODULAR CRIMPING TOOL

Suitable for RJ11, RJ12, RJ45. See Cat. page 54 for details. Cat. TH-1935

Was $59.95 SAVE $10 **$49.95**

ELECTRONICS TEST BENCH BOOK BARGAIN

HALF PRICE From Silicon Chip. Contains Plans and Instructions for a selection of the best test equipment kits from Siilicon Chip magazine. Includes details to build 18 projects. See catalogue P296.

Cat BS-5070 **Normally $10.95**

Now $4.95 or FREE WITH ANY JAYCAR KIT PURCHASED OVER $30

12VDC RED SIREN / STROBE

See ,00 catalogue page 285 for details. Cat. LA-5310

WAS $29.95 SAVE $15 1/2 PRICE **$14.95**

PROJECT TIMER

Unit features dual timers and is ideal for anyone who charges by the hour. See '00 Cat. page 54 for details.

Was $19.95 SAVE $10 Cat XC-0120 1/2 PRICE **Only $9.95**

NOTEBOOK COMPUTER SECURITY LOCK

Stops your valuable laptop growing legs and disappearing when you're not around. See Cat. page 158 for details. Cat. XL-5090

Was $39.95 SAVE $15 **$24.95**

WHAT A FLOP!

ACOUSTIC TILES

Supplied as a nested pair. See Cat. P220 for full details.

Cat. AX-3652 **Was $18** SAVE $3 **$15**

Cat. AX-3656

Was $22.50 SAVE $4.55 **$17.95**

DUMMY DOME CAMERA WITH CABLES

Ideal as a cost effective theft deterrent. See catalogue page 176 for details. Cat. LA-5314

WAS $29.95 SAVE $10 June **$19.95**

BULK USERS - CONTACT OUR WHOLESALE DEPARTMENT FOR SPECIAL PRICING (02) 9741 8552

NEW ADAPTORS

See cat pages 74 & 75 for details.

6.5mm STEREO PLUG TO 2 x 6.5mm STEREO SOCKETS Cat. PA-3530 **$2.95**

2.5mm STEREO PLUG TO 3.5mm STEREO SOCKET Cat. PA-3532 **$2.95**

6.5mm MONO PLUG TO 2 x 6.5mm MONO SOCKETS Cat. PA-3534 **$2.75**

TOSLINK FEMALE TO OPTO 3.5mm MALE Cat. PA-3574 **$4.9**

BI-DIRECTIONAL S PLUG TO S-VHS Cat. PA-3659 **$**

F59 PLUG TO PAL TV SOCK Cat. PA-367

12VDC 2A PSU

Unit Supplied with 2.5mm DC plug. See catalogue page 113 for details. Cat. MP-3210

SAVE $10 **$26.95**

WAS $36.95

13.5VDC 1.8A PSU

Unit Supplied with 2.5mm DC plug. See catalogue page 114 for details. Cat. MP-3212

SAVE $10 **$26.95**

WAS $36.95

5 In 1 Learning Remote Control

This remote will LEARN the function of 5 other remotes that you have. You can then retire the others, and just use this one. See '00 Cat. page 91 for full details. Cat. AR-1706

WAS $79.95 JUNE $59.95 SAVE $20

Metal 3.5mm Mono Phono Plug without Spring

Cat. PP-0117 **Only $0.80**

OVERNIGHT DELIVERY

PARTY SPEAKERS
See cat page 216 for details.

These speakers feature hard wearing black carpet with plastic corner protectors and a tough metal grille to protect them from dancing feet! The upper mid & treble is handled by 3 piezo drivers for the 12" (4 for the 15") to ensure high power handling and crisp high frequency protection. Includes a PTC speaker protector. These could also be used for PA applications but really, they are more for parties. You can comfortably power these from as little as 30WRMS and still get high levels because they are so efficient.

12" Model
Efficiency: 93dB/W
Impedance: 8 ohms
Power handling: 100WRMS
Box size: 690 x 385 x 350 mm
Cat. CS-2512
*2 needed for stereo

$139ea

15" Model
Efficiency: 94dB/W
Impedance: 8 ohms
Power handling: 120WRMS
Box size: 740 x 505 x 350 mm
Cat. CS-2515
*2 needed for stereo

$179ea

150 WATT POWERED SUBWOOFER
NEW

This black timber veneer finish 12" sub-woofer features auto power-on, level adjustment, crossover frequency adjustment, phase reversal switch, high and line level inputs as well as high and line level outputs. See catalog page 216 for details.

- •Power: 150 WRMS @ 8 ohm
- •Crossover: 40Hz to 180Hz
- •Size: 375 (W) x 510 (H) x 410 (D)mm Cat. CS-2456

$499

12" MUSIC/PA SPEAKER
NEW

200WRMS - These quality drivers are manufactured by SAMMI in Korea. We were able to secure a small distressed stock purchase. Take advantage of this fantastic opportunity, as they are prices well below normal, save a fortune! The instrument speakers feature a 200WRMS power handling, vented pole-piece, pressed-paper cone and double pleated impregnated fabric surround. Hurry, limited quantity. Cat. CG-2382

$149

5 PORT 10/100 N-WAY SWITCH
See catalogue page 163 for details on both of these. Cat. YN-8082

SAVE $30

WAS $179.95
JUNE $149.95

8 PORT 10/100 N-WAY SWITCH
Cat. YN-8084

SAVE $30

WAS $219.95
JUNE $189.95

UTILITY TOOL BOX WITH TORCH AND INTERNAL LAMP
A great tool/tackle box with 2 torches included. Size 300 x 200 x 150mm. See Cat. page 289 for details
Cat. HB-6324

WAS $17.95

SAVE $5

$12.95

RF WIRELESS SCROLL MOUSE
See cat page 159 for details
Cat. XM-5120

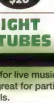

WAS $69.95

SAVE $20

$49.95

BLACK LIGHT FLUORO TUBES
NEW

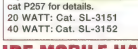

Used extensively for live music, discos, night clubs, and great for parties. See cat P257 for details.

20 WATT: Cat. SL-3151	$17.95
40 WATT: Cat. SL-3152	$24.95

IDE MOBILE HARD DISK CASE
See Cat. P158. Cat. XC-4670

WAS $28.75

SAVE $8.80

only $19.95

LAPTOP ATTACHE TOOL CASE BARGAIN
Cat. HB-6378

Was $49.95

SAVE $10

$39.95

PIANO FINISH HOME THEATRE SPEAKERS
NEW

120W POWERED SUBWOOFER
RE/SPONSE

This cabinet is finished in a black-gloss lacquer & houses a 10" sub-woofer speaker and amplifier. The amplifier features auto power-on, level adjustment, crossover frequency adjustment, phase reversal switch, high and line level inputs as well as high and line level outputs. •Power Output: 120 watts RMS into 8 ohms •Crossover: 40Hz to 180Hz •Size: 350 (W) x 450 (H) x 360 (D) mm See catalogue page 217 for details. Cat. CS-2454

$499

CENTRE SPEAKER
A stylish black lacquered 'piano finish' makes this speaker look as good as it sounds. Designed for surround sound applications, the cabinet has a power rating of 60 watts RMS and houses a 1" tweeter & 2 x 5" woofers Specifications: •Frequency Response: 50Hz to 17kHz •430W x 170H x 180 (D)mm See catalogue page 217 for details. Cat. CS-2450

NEW

$159

SCREENED BOOKSHELF SPEAKERS
NEW

These speakers are magnetically screened and rated at 30 watts RMS. They would be ideal as bookshelf speakers in smaller environments and features a 1" tweeter & a 5" woofer. See cat P217 for details. •Freq Res: 50Hz to 19kHz
•270W x 170H x 180Dmm Cat. CS-2452

$229

HOME THEATRE SPEAKER SYSTEM
NEW

Combine 1 centre speaker, 2 pairs of bookshelf speakers and 1 powered subwoofer from our new Re/Sponse range of piano finish speakers (shown individually on the right) to create your own impressive AC-3 or Pro Logic sound system. See cat page 217 for details. Cat. AA-0132

RE/SPONSE

$999

JC50 10" 3 WAY SPEAKER KIT SPECIAL
See catalogue page 213 for details

Quotes from Rob Evans of Electronics Australia magazine: "The JC-50's sound very good indeed. This is not a statement given lightly either." "The sound is consistent and balanced over a wide range of listening angles" "The treble range is very extended and detailed, while the low end delivers a nice degree of low end 'punch' without sounding lean or soggy" "This all adds up to a speaker system that's very enjoyable to listen to over it's full power range, with no sign of listening fatigue. You'd normally pay thousands of dollars for that privilege"
Cat. AA-0128 **Cat Price $859**

SAVE $200

FULL KIT WITH CABINETS $659

10" DOUBLE MAGNET SUB
RE/SPONSE

Awesome speaker. Twin 4½ voice coils, 250WRMS power handling. See Cat. P238 for full details. Cat. CS-2226

CAT. PRICE $249
Save $20

JUNE $229

180WRMS 12" SUBWOOFER IN CABINET FOR CAR SOUND
See '00Cat. page 103 for full details.
Cat. CS-2540

WAS $239
Limited quantity.

SAVE $40

NOW $199

3.5 DIGIT RUGGED DMM
See '00 Cat. page 35 for full specifications.
Cat. QM-1430

ONLY $29.50

SAVE ON NI-MH RECHARGEABLE BATTERIES
LIMITED QUANTITIES AVAILABLE

DESCRIPTION	CAT #	Was	Now	Save	10+
AAA 550mAh NI-MH	SB-2430	$3.59ea	$2.20	$1.39ea	$1.65ea
AAA 550mAh NI-MH - TAGS	SB-2431	$3.78ea	$2.30ea	$1.48ea	$1.75ea
AA 1400mAh NI-MH	SB-2436	$4.30ea	$3.30ea	$1.00ea	$2.85ea
AA 1400mAh NI-MH - TAGS	SB-2437	$4.55ea	$3.40ea	$1.15ea	$2.95ea
SUB C 2500mAh - TAGS	SB-2432	$8.95ea	$6.95ea	$2.00ea	$5.95ea
C SIZE 3300mAh	SB-2433	$11.45ea	$8.95ea	$2.50ea	$7.75ea
D SIZE 7400mAh	SB-2434	$24.90ea	$21.90ea	$3.00ea	$19.50ea

OVERNIGHT DELIVERY

MAILORDERS - FREECALL FOR PHONE ORDERS - 1800 022 888

NEW RANGE OF NI-MH RECHARGEABLE BATTERIES HIGHER CAPACITY, SAME PRICES

650mAh AAA size
Cat. SB-2444 $3.59
Cat. SB-2446 with tags $3.78

1500mAh AA size
Cat. SB-2442 $4.30
Cat. SB-2443 with tags $4.55

2700mAh Sub C size
Cat. SB-2447 $8.95

4500mAh C size
Cat. SB-2429 $14.95

8000mAh D size
Cat. SB-2449 $24.90

NEW

See catalogue page 130 for details.

SAVE

ADHESIVE NUMERIC & ROMAN NUMERALS

NEW

Complete with 3 full sets of different sized digits in both Roman Numerals and Numbers. Suits our Quartz Clock Movement shown on the right. Digits are 22, 15 & 11mm high. See catalog P265 for details. Cat. XC-0102

$5.95

QUARTZ CLOCK MOVEMENT

Use this unit and the above digit pack to produce your own professional looking wall clock. See cat P265 for details. Cat. XC-0100

Was $10.49

$7.95

BUY BOTH TOGETHER THIS MONTH AND PAY ONLY $10
SAVE $3.90 BUY 10 PAY $90

ELECTRICAL SCREWDRIVERS

These are the best screwdrivers we have ever seen! The handles feel wonderful to hold, and they are insulated right down the shaft to the tip. The blades are chrome vanadium, and they are GS and DVE tested and approved to 1000V. The range includes Phillips, Slotted and Posidrive. See catalogue page 47 for details.

NEW

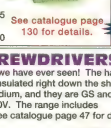

SLOTTED

Tip Width	Blade Length		
2.4mm	75mm	Cat. TD-2200	$3.95
4.0mm	100mm	Cat. TD-2201	$4.50
5.5mm	125mm	Cat. TD-2202	$4.95
6.5mm	150mm	Cat. TD-2203	$5.95
8.0mm	175mm	Cat. TD-2204	$6.50

PHILLIPS

Tip Size	Blade Length		
0	60mm	Cat. TD-2205	$3.95
1	80mm	Cat. TD-2206	$4.95
2	100mm	Cat. TD-2207	$5.95
3	150mm	Cat. TD-2208	$6.50

POSIDRIVE

Tip Size	Blade Length		
1	80mm	Cat. TD-2209	$4.95
2	100mm	Cat. TD-2210	$5.95
3	150mm	Cat. TD-2211	$6.50

JC55 CENTRE SPEAKER KIT

NEW

This speaker is designed as a centre speaker, but can actually be used for all speakers in a home theatre system - ie, centre, front & rear. When 5 are acoustically matched in a Dolby Digital AC-3 system, they maintain the same "voicing" right across the complete sound stage. The kit consists of 2 x 5" magnetically screened 4 ohm woofers and 1 x via screened D-19 8Ω tweeter in a ported 18 litre box tuned at 54Hz. Cat. AA-0130

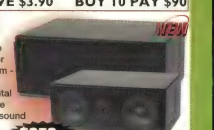

$279ea

BUY 5 $1,345

75W ULTRAVIOLET SPOTLIGHTS

SAVE $3 IN JUNE
ES BASE NEW BC BASE
Cat. SL-2761 Cat. SL-2763
JUNE ONLY $11.95 EACH

NORMALLY $14.95EA

Switchmode Power Supply for Laptop Computers

19VDC 3.16 Amp

NEW

Ideal for running many computer related products including laptops. •Input is IEC C8 lead Cat PS-4115. •Output is 2.5mm DC plug. •Centre positive. Cat. No. MP-3245

$129

NEW PARTY LIGHTING

SEE OUR 2001 CATALOGUE FOR OUR FULL RANGE OF PARTY LIGHTS

12" Coloured Mirror Ball

This mirror ball has rows of different coloured mirrors, red, white, blue, yellow and green. These colours allow just a white light to reflect colours around the room. Best used with the mains motor SL-2984. Cat. No. SL-2981

$55

Mini Strobe Light

Cat. SL-2990

NEW MODEL

$38.95

Mini Linklamp Party Light

This six light set uses special metal filament bulbs, which heat up, then switch off, cool down and turn on, and the cycle continues. So you end up with 6 different coloured globes all going on and off by themselves. No expensive controlling circuitry to buy. Globe colours are red, blue, purple, yellow, green and orange. These can be linked together to form a large wall of random flashing coloured lights. Spare globes available - miniature edison screw base. Cat. SL-2992

$79.50

Lighting Stand

Strong and sturdy lighting stand will extend from a height of 1,530mm to a max of 3,650mm. Designed to carry up to 20 Kg's on the square section cross tree. See Cat. P251 for details. Cat. CL-2800

$119

Coloured Mini Flower

Disco light designed to be mounted on the ceiling, or on a lighting stand. It projects coloured light fragments (flowers) onto the dance floor or a wall. It is sound controlled, via the inbuilt microphone, which means the coloured flower light fragments rotate and change direction with the music. •240VAC operated •mounting bracket •mains lead and plug. •halogen globe not included use 50W 12V Cat SL-2726 $4.55

Cat. SL-2940

$139

PAR36 SHORT PINSPOT SELLOUT

See '00 cat P254 for details. Cat. SL-2962

WAS $69.95

SAVE $20

$49.95

Standard PAR36 Can Cat. SL-2960 $37.95

PAR 36 GLOBE DEAL

We have some of these globes with some small scratches on the reflector.

Buy a PAR 36 GLOBE SL-2964 at the standard price of $9.95 and we will throw in a scratched one FREE.

FOG MACHINE $175

Perfect for your party! Cat. AF-1200

BUY IN JUNE & RECEIVE FREE
5 Litres of Fog Juice
Cat. AF-1205
Value $39.50

MILLENIUM LIGHT CHASER

SAVE $20

Features a fully functional remote control and is ideal for party or DJ use. See Cat. P252 for details. Cat. SL-2948

Was $149 $129

PAR56 Black Can Light

Accepts a 300 watt 240VAC lamp . •adjustable mounting bracket. •quick change gel-film holder •500mm cable. Cat. No. SL-2975

$79.95

PAR56

240VAC 300W Spot GE Filament Type Globe
Cat. SL-2976

$32.95

NEW COMPACT FLOURO BLACK LIGHTS

15 Watt
2 Volt, equivalent to a 70W standard globe. Cat. SL-3154

$23.95

26 Watt
3 Volt, equivalent to a 120W standard globe. Cat. SL-3156

$32.95

MAILORDERS - FREECALL FOR PHONE ORDERS - 1800 022 888

OVERNIGHT DELIVERY

OVERNIGHT DELIVERY

$359

2.4GHz WIRELESS A/V MONITOR SYSTEM

NEW!

This wireless CCD surveillance camera and companion receiver can operate at distances of up to 100 metres clear line of sight. The system comprises a self-contained B&W CCD camera fitted with 10 'night vision' infra-red LEDs and an electret microphone. Unit will operate on either 12VDC or 240VAC. The receiver is built into the monitor which has RCA sockets enabling video and audio signals to be fed to an external monitor or video recorder. See cat P197. Cat. QC-3450

20A 24V TO 13.8V REDUCER SELLOUT

25Amp peak output. See ,00 catalogue page 139 for details.
Cat. MP-3065 **WAS $159** SAVE $30 **$129**

13.8V 2A NON-REGULATED PSU SELLOUT

See ,00 catalogue page 135 for details. Cat. MP-3018
WAS $41.13 SAVE $14.18 **$26.95**

LAB POWER SUPPLY SELLOUT

ONLY 35 AVAILABLE - BE QUICK

0 - 30VDC 0 - 2.5A REGULATED LAB POWER SUPPLY

Features include sperate digital LCD displays for both Output Voltage and Output Current. See ,00 catalogue for full specifications.
Cat. MP-3082 **WAS $225** SAVE $46 **$179**

230VAC/300W LAMP FLASHER

Ideal for flashing lights on billboards, signs, shop displays, etc.
Flash rate 0.6 - 9 seconds.
See Cat. page 20 for details.
Cat. AA-0306
NEW!
$24.95

Fyshwick & Newcastle stores now open Sundays 10am until 4pm

INVERTER SELLOUT

See '99/00 Cat. for all 12VDC Input to 230VAC except*

24V 200 Watt
Cat. MI-5039
$109
Was $120
Save $11
LIMITED QTY

Remote Control for MI-5045/55
Cat MI-5056
Was $119
Save $20
$99

12V 920 Watt
Cat MI-5045
$529
Was $599
Save $70

SINEWAVE

12V 350 Watt Sinewave
Cat. MI-5050
$389
Was $429
Save $40

12V 500 Watt
Cat. MI-5052
$309
Was $329
Save $20
Limited Qty

12V 750W Sinewave
Cat. MI-5055
$769
Was $969
Save $200

SCARY MAGNETS

See catalogue page 271 for details.

PKT 4 SMALL
- Measures 10 x 3mm.
Cat. LM-1622
WAS $10.75 SAVE $3 **$7.50**

LARGE
- Measures 25 x 5mm.
Cat. LM-1618
WAS $14.50 SAVE $4.50 **$10**

EXTRA LARGE
- Measures 35 x 5mm.
Cat. LM-1620
WAS $22.50 SAVE $6 **$16.50**

Introductory Special on Garden Lighting Transformers

See catalogue page 255 for details.
NEW!

12VAC 20W INDOOR
Cat. MP-3041 SAVE $3 WAS $12.95 **June $9.95**

12VAC 105W INDOOR
Cat. MP-3043 SAVE $7 WAS $39.95 **June $32.95**

12VAC 150W INDOOR
Cat. MP-3044 SAVE $10 WAS $49.95 **June $39.95**

24VAC 150W INDOOR
Cat. MP-3045 SAVE $10 WAS $49.95 **June $39.95**

12VAC 150W OUTDOOR
Cat. MP-3048 SAVE $15 WAS $69.95 **June $54.95**

24VAC 150W OUTDOOR
Cat. MP-3049 SAVE $15 WAS $69.95 **June $54.95**

POWER WINDOW CLOSERS SELLOUT

Closes car windows when car is locked or alarm is armed. See 2000 cat P110

2 DOOR SYSTEM
Cat. LR-8850
SAVE $20 **$59.95**
WAS $59.95

4 DOOR SYSTEM
Cat. LR-8852
SAVE $20 **$59.95**
WAS $79.95

REVERSING AND PARKING SENSOR

See 2000 catalogue page 112 for details.
Cat. LR-8860
SAVE $10 **$59.95**
WAS $69.95

STAEDTLER CDR PEN MARKER

NEW!

This clever little pen is designed specifically for marking the surface of CDR's & features a fine 0.8-1.0mm tip.
Cat. TM-3050
$4.95

RETRACTABLE EXTENSION LEAD RJ12 TO RJ12

NEW!

Automatic retracting cable suitable for modems and laptops. Ideal for portable networking. Four conductors. Length 2.5 metres.
Cat. YT-6050
$29.95

DO YOU OWN A COP WIRELESS HOME ALARM SYSTEM?

Accessories for COP Wireless Home Alarm Systems. See '99 Cat Page 88 for details.

WIRELESS PIR DETECTOR
Cat. LA-5491 **WAS $79.50 Save $40** **$39.95**

REMOTE CONTROL TRANSMITTER
Cat. LA-5492 **WAS $42.95 Save $27.95** **$15**

WIRELESS REED/MAGNETIC SWITCH
Cat. LA-5493 **WAS $47.95 Save $27.95** **$20**

PRE-WOUND FERRITE COILS

NEW!

3 Amp	100uH	Cat. LF-1272	$3.25ea
5 Amp	47uH	Cat. LF-1274	$3.25ea
5 Amp	220uH	Cat. LF-1276	$3.25ea
5 Amp	470uH	Cat. LF-1278	$3.50ea

WE HAVE SLASHED THE PRICES ON SMART MEDIA CARDS

Perfect for digital cameras, PDA's, PC's, MP3 players etc)

PRICES SLASHED

Smartmedia™ Memory Card

NEW!

Rewritable, non-volatile storage medium for high capacity portable devices such as Digital Cameras, PDAs, MP3 players etc. Fully compatible with PCMCIA release 2.1. •45 x 37 x 0.76mm

16mB	Cat. XC-4775	$64.95
32mB	Cat. XC-4776	$119.00
64mB	Cat. XC-4777	$209.00

NEW 128MB

Compactflash™ Memory Card

NEW!

Rewritable, non-volatile storage medium for Compact Flash Card ATA standard. •36.4 x 42.8 x3.3mm

16mB	Cat. XC-4771	$79.95
32mB	Cat. XC-4772	$119.95
64mB	Cat. XC-4773	$199.95
128mB	Cat. XC-4774	$409.00

OVERNIGHT DELIVERY

RATCHET CRIMPING TOOL FOR INSULATED TERMINALS

NEW

This heavy duty tool is fitted with hardened and tempered jaws. Crimping pressure is precisely adjustable. See catalogue page 54 for details.
Cat. TH-1829

$49.95

VCR SERVICE TOOLKIT SELLOUT

Not available from dealers.
See '00 Cat. page 57 for details.
Cat. TD-2050

WAS $69.95

SAVE $20

$49.95

STEREO PHONO LEADS

3.5mm TO 3.5mm STEREO PHONO PLUGS

1.5M Cat. WA-1022 **$1.00**

5M Cat. WA-1021 **$1.50**

BRAVO SCREWDRIVER SET

Pocket screwdriver set. Bits supplied - Phillips 1, 2, 3 and Slotted 1, 2, 3. See '99 cat P131 for details.
Cat. TD-2020

WAS $6.50

SAVE $2.55

$3.95

30PC SECURITY BIT SET

Not available from dealers.
See '99 catalogue page 130 for details.
Cat. TD-2001

WAS $24.95

SAVE $7

$17.95

RESPONSE FLAT ADHESIVE BACKED OFC SPEAKER CABLE

Not available from dealers.
See '00 catalogue page 210 for details.

2-WAY Cat. WB-1742

WAS $3.95m

SAVE $1.45

$2.50M

4-WAY Cat. WB-1744

WAS $6.95m

SAVE $3

$3.95M

TWIN PIGGY BACK RCA TO RCA AUDIO LEADS

NEW

2 x male RCA's to both 2x male and female RCA's. See Cat. page 148 for details.

1 metre Cat. WA-7090	$7.95
3 metre Cat. WA-7091	$9.95
5 metre Cat. WA-7092	$11.95
10 metre Cat. WA-7093	$17.95

TRIPLE PIGGYBACK RCA TO RCA A/V LEADS

3 x male RCA's to both 3 x male and female RCA's. See Cat. page 150 for details.

NEW

1.5metre Cat. WV-7324	$10.95
3 metre Cat. WV-7325	$12.95
5 metre Cat. WV-7326	$15.95

51 PIECE RATCHET SCREWDRIVER SOCKET SET

See '00 catalogue page 56 for details.
Cat. TD-2002

WAS $32.95

SAVE $8

$24.95

NEON TEST SCREWDRIVER SELLOUT

SAVE $1

See '00 catalogue page 54 for details.
Cat. TD-2048

WAS $2.50

$1.50

MAGNIFYING HEADLAMP WITH LIGHT

Not available from dealers.
Limited quantities available.
See catalogue page 261 for details. Cat. QM-3512

WAS $69.95

SAVE $10

$59.95

JAYCAR - YOUR SURVEILLANCE SPECIALISTS

B&W LOW COST QUAD PROCESSOR

NEW

This processor features twin outputs and is designed to drive both a monitor and a VCR for recording purposes. See catalogue page 196 for details. Cat. QC-3361

$239

B&W CCD BULLET CAMERA

This quality bullet camera is weatherproof and in ideal for use in low light areas. Minimum illumination is just 0.5Lux! See catalogue page 192 for details. Cat. QC-3467

$169

B&W CCD CAMERA WITH IR ILLUMINATION

NEW

Integrating an infrared spotlight, this camera gives excellent coverage right down to 0 Lux! See catalogue page 191 for details.
Cat. QC-3468

$109

HI-RES COLOUR PRO DOME CCD CAMERA

NOT AVAILABLE FROM DEALERS
LTD QTY AVAILABLE

Features a Panasonic photo sensor.
Cat. QC-3487

SAVE $60

WAS $259

$199

BLOOD PRESSURE METER

See '00 Cat. page 268 for details.
Cat. QM-7250

WAS $125

SAVE $20

$105

CROW MEMOCAM Covert Camera, PIR Detector & Smart VCR All In One

NEW

- Stand alone camera and built in recorder with memory card.
- Ease of Installation with no video cables required
- Simply mount and plug in power.
- Built in event recorder of up to 6,000 images
- Fully functioning PIR detector
- Removable Smart Memory card
- Supplied with AC plugpack, remote control, memory card and reader for computer.

Cat. QC3010

$1699

AURA INTERACTOR BACKPACK & CUSHION

Some of the cartons are slightly scuffed, but the contents inside are perfect!

This is by far the best, and now more cost effective way of adding a new dimension to your home computer, video gaming console, or TV.

CRAZY PRICES

Backpack

Cat. XC-1000

SAVE $28

$19.95

KITS INCLUDE:

Cable Set Cat XC-1001	$9.95
15W Amplifier Cat. XC-1006	$5.00
Shaker Actuator* Cat. XC-1008	$24.95
Power Supply Cat. MP-3055	$24.95
Total Value	$64.85

*Installed inside both the Backpack & Cushion

Cushion

Cat. XC-1005

SAVE $18

$29.95

SLIDER POT BARGAINS

SOME HALF PRICE

10K MINI SLIDER POT

ALPS - Pkt 10 - 30mm 20KΩ dual gang logarithmic pot. See '00 cat P214 for details.
Cat. RP-3925

WAS $10

SAVE $5

$5

ALPS 10K SLIDER POT

Pkt 10 - 30mm 10Kohm logarithmic pot. Cat. RP-3928

WAS $10

SAVE $5

$5

ALPS 10K SLIDER POT

Pkt 2 - 45mm 10Kohm logarithmic pot. Cat. RP-3930

WAS $5

SAVE $2

$3

ALPS 10K SLIDER POT

Pkt 5 - 10Kohm PCB mount Linear pot. Cat. RP-3932

WAS $5

SAVE $2

$3

BUDGET COMPUTER TOOL KIT

NOT AVAILABLE FROM DEALERS
LIMITED QUANTITY

See '99 Cat. page 134 for details.
Cat. TD-2039

WAS $14.95

SAVE $4

$10.95

MAGNIFIER ON FLEXIBLE STAND

HALF PRICE

Lens size is 62mm. See '00 Cat P273 for details.
Cat. QM-3530

WAS $19.95

SAVE $10

$9.95

ECONOMY MAGNIFIER LAMP

SAVE $15

See '00 catalogue page 273 for details.
Cat. QM-3528

WAS $39.95

$24.95

MAILORDERS - FREECALL FOR PHONE ORDERS - 1800 022 888

TDK Digital Audio CDR

1+ $3.50
Buy 10 $31.50

80 minutes.
Cat. XC-4706

BARGAIN CDR'S

Pyrod Black Media CDR
Cat. XC-4714
Only $2.25ea or buy 10 $19.50

10Pkt. Pyrod Gold CDR's
Cat. XC-4717
Only $9.95 or 10 Packs (100 disks) $87.50

25Pkt. Pyrod Silver CDR's
Cat. XC-4712
•80min
Only $23.95 per pkt of 25

50Pkt. Pyrod Silver CDR's
Cat. XC-4718
•80min
Only $39.95 per pkt of 50

PIEZO IGNITION GAS SOLDERING IRON

See '00 Cat. page 47 for details.

Cat. TS-1290
SAVE $10
NOW $49.95
WAS $59.95

ROBOT SELLOUT!

BUY NOW FOR XMAS GIFT
See '00 catalogue page 6 for details.

SUMO MAN
Cat. KR-3106
WAS $89.95
SAVE $30
$59.95

SOCCER ROBOT II
Cat. KR-3108
WAS $79.95
SAVE $24.95
$55

MOON WALKER II
Cat. KR-3112
WAS $69.95
SAVE $20
$49.95

18 Pin PIC ZIF Socket

Cat. PI-6480
$19.95

NEON TEST SCREWDRIVER

This neon tester a clear window for the neon and features a large finger guard to product the user. See Cat. page 46 for details.
Cat. TD-2046
$2.95

LANTERN TORCH

See '00 Cat. page 261 for details.
Cat. ST-3080
WAS $13.30
SAVE $11.95
$15.25

RECHARGEABLE LANTERN TORCH

See '00 Cat. page 261 for details.
Cat. ST-3081
WAS $61.15
SAVE $16.15
$45

PURCHASE A SPARE BATTERY AT TIME OF SALE FOR ONLY $20 EXTRA SAVE $12.95

DISCONTINUED PRODUCT SELLOUT

There is a very limited quantity of most of these products available.
They may not be in every Jaycar store.They are not available from dealers.
See 1999 and 2000 catalogues for details.

Cat No	Description	WAS	NOW
AA-0280	Fake Alarm, red/yellow Led	$12.40	$7.95
AA-0300	12VAC 50W Halogen Flasher	$39.95	$19.95
AA-0307	Light Flasher 12-24VDC @ 6A	$27.95	$15.00
AA-0319	12VAC 50W Halogen Dimmer	$39.95	$19.95
AR-1450	VHS Black Plastic Case	$2.20	$1.00
AR-1460	Cassette Tape Headcleaner 2 Pack	$6.95	$2.00
AR-1500	Stereo Cassette Deck Mechanism	$15.00	$5.00
AC-1660	CD/Phono Audio Selector Switch	$19.95	$10.00
AA-3080	120A Car Noise Suppression Fltr	$89.95	$59.95
AM-4140	Mic Stand- Floor-Telescopic	$57.41	$42.50
AV-6510	BNC-BNC Video lead 1.5mt	$4.85	$2.50
BT-1344	Prog & Customise PIC Micros old	$89.95	$69.95
BT-1360	Robot Builders Bonanza old ed	$49.95	$39.95
BM-2485	Nickel Cadmium Batteries Book	$29.15	$18.50
BM-4570	Zener Diodes & Applications Bk	$24.75	$16.50
BM-4581	World Trans/IC/Diode Equiv Old Ed	$32.95	$24.95
BM-4583	Vol 2 World Trans/IC/Diode Equiv Old	$32.95	$22.95
BE-7030	Speakers For Musicians Book	$17.55	$12.00
CW-2138	12" 8R Re/Sponse Poly Woofer	$179.95	$119.95
CS-2212	Re/Sponse 4R Dome Tweeter	$29.25	$18.50
CG-2380	12" 100W Guitar Speaker	$112.00	$75.00
DC-4050	Univ Car Cellular Ant Replacement	$11.25	$6.00
HP-0562	#4 x 9mm Self Tapper Phil. Pkt 200	$4.30	$2.00
HP-0563	#4 x 9mm Self Tapper Phil Pkt 1000	$15.00	$7.50
HP-0566	#4 x 9mm Self Tapper Slot Pkt 200	$4.00	$2.00
HP-0567	#4 x 9mm Self Tapper Slot Pkt 1000	$15.00	$7.50
HP-0576	#4 x 19mm Self Tapper Phil Pkt 1000	$12.75	$6.50
HP-0792	PCB Mt Wire Saddle Clamp Pkt 25	$6.95	$1.00
HP-0870	6MM Untapped Spacer Pkt 100	$10.49	$8.00
HP-1516	25MM Hole Plug Pkt 25	$4.95	$1.00
HM-3206	4 Way Launcher Vertical	0.21ea	10 for $0.65
HM-3209	16 Way Launcher Vertical	0.86ea	10 for $2.50
HM-3210	8 Way Launcher Vertical	0.64ea	10 for $2.00
HM-3211	28 Way Launcher Vertical	1.50ea	10 for $6.50
HM-3213	3 Way Launcher Right Angle	0.24ea	10 for $0.75
HM-3215	8 Way Launcher Right Angle	0.64ea	10 for $2.00
HM-3217	2 Way Launcher Socket Crimp	0.56ea	10 for $1.80
HM-3218	4 Way Launcher Socket Crimp	0.73ea	10 for $2.25
HM-3219	6 Way Launcher Socket Crimp	0.86ea	10 for $2.50
HM-3220	8 Way Launcher Socket Crimp	1.05ea	10 for $3.50
HB-5410	44mm Black Rack Case	$59.95	$39.95
HB-6351	Sandman Aluminium Travel Case	$229.00	$169.00
HB-6357	Delux Small Aluminium Laptop Case	$129.95	$99.00
HG-9966	Scotchcal 8550 Developer 100ml	$5.95	$3.00
KJ-7020	30 in 1 Electronic Project Kit	$33.95	$24.95
LF-1285	4 Way Ribbon Cable Ferrite Sleeve Pair	$2.50	$1.00
LT-3009	4 way Inductive Splitter	$9.34	$5.95
LA-8906	Car Ultrasonic Detector	$49.95	$32.95
MF-1009	PCB Transformer 12+ 12V 7VA	$16.25	$11.00
NA-1050	Cleaner Swabs/Picks Pkt 10	$3.95	$2.75
PS-0676	N Female Chas Mtg Skt Square	$5.50	$2.00
PS-0685	SO-239 Bulkhead Skt (PL259)	$2.40	$1.00
PS-0835	Wallplate (Plas) 1 x D25 Female	$5.70	$3.50
PM-0838	D25 Shielded Hood Bargain	0.48ea	10 for $2
PM-1446	RJ45 Boots Black Pkt50	$11.95	$7.50
PA-3520	Adapt 6.5mm Metal Plug each end	$4.75	$2.25
PS-4040	Single Power Point	$10.95	$6.95
PS-4042	Modular Single Power Point	$10.95	$6.95
PS-4052	Double Architrave Light Switch	$9.35	$5.95
PS-4055	Single Wall Light Switch	$6.55	$4.50
PS-4057	Double Wall Light Switch	$9.85	$6.50
PS-4058	Protector Double Safety Power Point	$21.95	$11.95
PT-4504	Red Insulated Pin Terminal Pkt 8	$1.30	$0.75
PT-4517	Red Insulated Pin Terminal Pkt 100	$9.53	$6.95
PT-4519	Male Spade Lug 4.3mm Pkt 100	$9.53	$6.95
QM-1250	3.5 Digit 8000 Count RS232 DMM	$149.00	$119.00
QM-1260	3.5 Digit 80,000 Count RS232 DMM	$199.00	$149.00
QM-1265	RS232 Lead/Software for QM1250/60	$29.78	$15.00
QM-1270	Intelligent DMM	$139.86	$99.00
QM-1340	4.5 Digit DMM	$99.00	$79.00
QM-1470	Low Ohms DMM	$69.47	$45.00
QC-3445	Wireless B&W CCD Camera System	$573.66	$399.00
QC-3448	Extra Camera for above	$399.00	$279.00
RP-3915	Alps 5K Slider Pot with LED. Click Cnt	$3.78	$1.00
RP-3916	Alps 5K Slider Pot with LED	$3.95	$1.00
HK-7722	Knob to suit Above Sliders	$0.48	$0.35
RP-3971	3.3R 3W Wire Wound Pot	$4.74	$1.50
RG-5260	5uF Main Cap Pkt 4	$7.61	$2.95
SF-1930	20A Maxi Blade Fuse Yellow	$5.95	$1.95
SF-1934	40A Maxi Blade Fuse Orange	$5.95	$1.95
SF-1938	60A Maxi Blade Fuse Grey	$5.95	$1.95
SB-2435	AA Flat Ni-Mh 650 mA Solder Tags	$10.50	$5.95
SB-2538	S936 Flat Watch Type Battery	$1.40	$0.40
SL-2818	9mt Garden Lighting with 240V PSU	$35.95	$22.50
TH-1751	Zirconia Ceramic Tweeters	$49.95	$34.95
TH-1775	Conductive Brush	$9.55	$4.95
WH-3076	4G Black Auto power cable	6.50mt	2.00mt
WT-5522	Banana Plug Test Lead Bargain	$3.95	$2.00
WS-6004	Header Jumper Leads Pkt 10	$11.25	$6.95
XC-4729	48 Grade CDR in Jewel Case		$1.20
XB-9001	Bargain Box	$29.95	$20.00
YS-5530	Moth Repeller - Ultrasonic	$19.95	$5.00
YT-6035	Mini Telephone Amplifier	$14.32	$7.50
YT-7060	Headset Telephone	$79.95	$59.95

MAILORDERS - FREECALL FOR PHONE ORDERS - 1800 022 888

MAILORDERS - FREECALL FOR PHONE ORDERS - 1800 022 888

NEW KITS FOR THIS MONTH

MULTIPURPOSE FAST BATTERY CHARGER

NEW

Refer Silicon Chip June 2001

This intelligent and versatile charger can charge a huge range of batteries voltages and types: 1.2V to 14.4V in 1.2V steps for Nickel Cadmium (NiCd), Nickel Metal Hydride (NiMh) and Lithium Ion (LiON) from 1.2Ah to 4Ah, as well as Sealed Lead Acid Gel Cell (SLA) and lead acid batteries at 6 or 12V @ 1.2Ah+. It has more intelligent features than what we can list here. Some features include discharger for NiCd & NiMh, Voltage limit charge for SLA & lead-acid, Voltage drop (dV/dt) & Temp rise (dT/dt) full charge detection for NiCd & NiMh, Under and over temp cutout, timeout & fuse protection and multi-LED charge indicators. See website for more details. This is the ultimate battery charger. Kit supplied with case, PCB & all electronics parts to build the complete unit. Cat. KC-5315

$229.95

4 CHANNEL CCTV SWITCHER

Refer Silicon Chip June 2001. Display up to 4 CCTV cameras sequentially on your monitor. Variable scan rate and pause function. RCA sockets for video and audio signal. Kit supplied with punched and silk screened case, PCB and all electronics parts to build the complete unit. Requires 12VDC / 150mA. Cat. KC-5316

$89.95

ATMEL MICRO CONTROLLER PROGRAMMER KIT

SAVE $10

See cat P16 for details. Cat. KG-6066

WAS $79.95

$69.95

Parallel Port PIC Programmer & Checkerboard Kit

NEW

Refer Silicon Chip March 2001

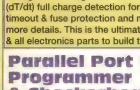

The ultimate PIC programmer. Use it to download codes from your PC and then check if the PIC (16F84/A) does what it is supposed to do. Kit is supplied in short form. Kit supplied with PCB, PIC 16F84A, all electronic components and Assembly and Download Software for DOS and Win95/98. Requires: 12-14VAC/DC / 300mA (use plugpack MP3006) and parallel port cable (use WC7508). Cat. KC-5307

$99.95

Dr Video - Video Stabiliser Kit

NEW

Refer Silicon Chip April 2001

Hidden pulses in video signals can cause the picture to 'jitter' or 'jump' around on the TV or video projector. This low-cost kit removes these nasties and cleans up the video signal for a more stable viewing. A toggle switch allows sharpening or softening of the picture. Please note that this project is designed to achieve stable and steady pictures for viewing and not for recording. Even though this unit cancels macrovision protection, we must point out that recording copyright material is illegal. Kit supplied with Case (141 x 111 x 35mm), punched and silk-screened panels, PCB &all electronic components. 12VDC plug pack required – use MP3006. Cat. KC-5308

$59.95

Improved FM Stereo 'Minimitter' Transmitter Kit

NEW

Refer: SC April 2001

Due to the tremendous success of the 1988 FM 'Minimitter', the Silicon Chip team has refined it for an even better performance. It now transmits stereo audio signals to a FM radio, within a range of 35 metres. You can connect your CD player (or record player) to the Mini-Mitter and then listen to your favourite CD's or records anywhere in the house, via your Walkman personal portable. Also ideal for playing CD's in your car - via your portable CD player and your car stereo/radio. This design is easier to build and setup. Kit includes PCB, case, front panel and all component parts. 2 x 'AA' batteries as 3VDC power source supplied. Cat. KC-5310

$59.95

SPRING REVERB KIT

See catalogue page 7 for details

Cat. KC-5282

WAS $79.95 SAVE $10

$69.95

5 FUNCTION PIC TRAINER KIT

See '00 catalogue page 16 for details.

Cat. KD-6060

WAS $110 SAVE $15

$95

PRESETTABLE 4 DIGIT DOWN COUNTER KITS

NEW

As featured in Silicon Chip May '01. See catalogue pages 18 & 21 for details.

Cat. KD-6058

Cat. KD-6084

$36.95

$39.95

Digital Fuel Mixture Display Kit

NEW

Refer: S. C. Sept 2000

This brilliant dashboard mounting unit monitors and displays your car's air-fuel ratio in real time on a three digit display and at the same time on the programmable 10-LED bargraph. •Kit includes case with silk-screened panel, PCB's, pre-programmed PIC micro, 7 segment displays, red acrylic, hookup wire & all electronic components. Cat. KC-5300

$62.95

PHONE ORDERS - FREECALL FOR PHONE ORDERS - 1800 022 888

EMAIL ORDERS: techstore@jaycar.com.au **WHOLESALE EMAIL: wholesale@jaycar.com.au**

Jaycar ELECTRONICS

HEAD OFFICE
100 SILVERWATER RD.
SILVERWATER.
PHONE: (02) 9741 8555
FAX: (02) 9741 8500

Quality Assured Standards Australia

Quality Control Systems

Quality Endorsed Company ISO 9002 Lic 6143

WHOLESALE
PHONE: (02) 9741 8552
ORDERS: 1300 738 552
FREEFAX: 1300 738 500
MELB: (03) 9574 0299

MAIL ORDERS **FREE POST TO:** Reply Paid 72. Jaycar Mail Orders. PO Box 6424 Silverwater NSW 1811
FREE CALL FOR ORDERS: 1800 022 888
ENQUIRY HOTLINE: (02) 9741 8538 **FAX: (02) 9741 8559**

ROAD FREIGHT ANYWHERE IN AUST (up to 20kg) $15.50 POST & PACKING: $10 to $24.99–$4.40 $25 to $49.99–$5.50 $50 to $99.99–$7.70 OVER $100–$8.80

bankcard VISA Diners Club International MasterCard eftpos

VISIT OUR WEBSITE
www.jaycar.com.au

ADELAIDE • 191-195 Wright St (Cnr. St. Lukes Pl.) • Ph:(08) 8231 7355 • Fax:(08) 8231 7314 • Mon/Thur:8.30-5.30 • Fri:8.30-8.30 • Sat:8.30-4
SA • 144 Logan Rd • Ph:(07) 3393 0777 • Fax:(07) 3393 0045
BURNABA • Mon/Fri:8.30-5.30 • Thurs:8.30-8.30 • Sat:9-4 • Sun:10-4
QLD • 1322 Gympie Rd, cnr Albany Creek Rd • Ph:(07) 3863 0099
ASPLEY • Fax:(07) 3863 0182 • Mon/Fri:9-5.30 • Thurs:9-8.30 • Sat:9-4
QLD • 177 Ingham Road, West End • Ph: (07) 4772 5022
TOWNSVILLE • Fax: 07 477 25622 • Mon/Fri:9-5.30 • Thurs:9-8.30 • Sat:9-4
QLD • 121 Wollongong Street, Fyshwick • Ph:(02) 6280 1505
CANBERRA • Fax:(02) 6239 1521 • Mon/Fri:9-5.30 • Sat:9-4 • Sun:10-4
ACT • Shop 7, 45 Albert St • Ph:(03) 9663 2030 • Fax:9663 1198
MELBOURNE • Mon/Fri:8.30-5.30 • Fri:8.30-8.30 • Sat:9-4 • Sun:10-4
CITY • 266 Sydney Rd • Ph:(03) 9384 1811 • Fax:(03) 9384 0061
COBURG • Mon/Fri:9-5.30pm • Fri:9-8.30 • Sat:9-4
VIC • 141A Maroondah Hwy • Ph:(03) 9870 9053 • Fax:(03) 9870 2598
RINGWOOD • Mon/Fri:9-5.30 • Fri:9-8.30 • Sat:9-4
VIC • 887-899 Springvale Rd Mulgrave, Nr Cnr Dandenong Rd
SPRINGVALE • Ph:(03) 9547 1022 • Fax:(03) 9547 1046
VIC • Mon/Fri:8.30-5.30 • Fri:8.30-8.30 • Sat:9-4 • Sun:10-4

HOBART • 140 Campbell St, Hobart • Ph: (03) 6231 5877
TAS • Fax:(03) 6231 5876 • Mon/Thur:9-5.30 • Fri:9-7 • Sat:9-4
SYDNEY CITY • 129 York St • Ph:(02) 9267 1614 • Fax:(02) 9267 1961 Mon/Fri:8.30-5 • Thurs:8.30-8.30 • Sat:9-4 • Sun:10-4
BANKSTOWN • 363 Hume Hwy Cnr Meredith • Ph:(02) 9709 2822 • Fax:(02)9709 2936 • Mon/Fri:9-5 • Thurs:9-8 • Sat:9-4 • Sun:10-4
GORE HILL • 184 Pacific Hwy Cnr. Bellevue Ave • Ph:(02) 9439 4799 • Fax:(02)9439 5457 • Mon/Fri:8.30-5.30 • Thurs:8.30-8.30 • Sat:9-4 • Sun:10-4
PARRAMATTA • 355 Church St Cnr. Victoria Rd • Ph:(02) 9683 3377 • Fax:(02) 9683 3499 • Mon/Fri:9-5.30 • Thurs:9-8.30 • Sat:9-4 • Sun:10-4
PENRITH • 199 High St • Ph:(02) 4721 8337 • Fax:(02) 4721 8935 Mon/Fri:9-5.30 • Thurs:9-8.30 • Sat:9-4 • Sun:10-4
SILVERWATER • 345 Silverwater Rd • Ph:(02) 9741 8557 • Fax:(02) 9741 8500 • Mon/Fri:9-5.30
NEWCASTLE • 590 Hunter St (Opp. Selma Street) • Ph:(02) 4965 3799 Fax:(02) 4965 3796 • Mon/Fri:9-5.30 • Sat 9-4 • Sun:10-4
WOLLONGONG • 2/67 Kembla Street Ph: 4226 7808 • Fax: 4226 5623 • Mon/Fri:9-5.30 • Thurs:9-8.30 • Sat:9-4 • Sun:10-4
PERTH • 326 Newcastle St Northbridge • Ph:(08) 9328 8252 • Fax:(08) 9328 8882 • Mon/Fri:9-5.30 • Thurs:9-7.30 • Sat:9-4 • Sun:10-5
NZ • 231 Khyber Pass Rd, Cnr Boston Rd, New Market, Auckland. • Ph:(09) 377 6421 • Fax:(09) 377 6422 • Mon-Sat:9-5.30 • Sun:10-4

***OVERNIGHT DELIVERY** AVAILABLE ON REQUEST Subject to conditions:
•Max weight 3KG (inc cube) $10 •No dangerous goods •Max weight 5kg (inc cubic) $16
•Stock & availability •Orders must be received before Midday E.S.T.

BOOK REVIEWS

Servicing methods without a circuit

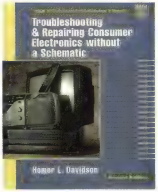

Troubleshooting & Repairing Consumer Electronics Without A Schematic, by Homer L. Davidson. 2nd edition published 1997 by McGraw-Hill, USA. Soft covers, 186 x 232mm, 476 pages. ISBN 0 07 015765 0. $58.95.

If the title is anything to go by, this book could be the answer to many people's prayers, well at least for anyone attempting to do service work. So often these days, circuits or manuals can be either impossible to obtain, never were available or are too expensive to justify for one service job.

This book shows how service people manage to make repairs on electronic equipment without the aid of manuals or circuits, or as the Americans call them, schematics. That remark should indicate that this is an American book and as you could expect, all the examples it gives are exclusive to the USA marketplace. However, the methods involved are universal and can be applied here in Australia as well as anywhere else in the world.

Nor need you worry that the book dwells on US standards for consumer equipment such as NTSC in TVs and VCRs. The service examples given apply equally well anywhere.

The book begins with two chapters on general servicing methods and troubleshooting. This makes a big emphasis on visual inspection, listening for faults and even noting where components appear to be overheating. It then talks about careful observation of faults, particularly with TV sets where symptoms on the screen can give a good indication of where the fault lies.

There is also good information on how to make measurements using digital multimeters and to a lesser extent, with an oscilloscope. The author shows how to check transistors and diodes by making resistance measurements and while all this is pretty fundamental, it is normal procedure for a lot of servicing. It would be relatively seldom, if ever, that service people would actually test transistors for gain, voltage breakdown, etc.

All told, there are 13 more chapters, under headings such as Repairing Audio Amps, Servicing Auto Receivers, Troubleshooting Cassette Players, Servicing the Compact Disc Player, Troubleshooting the TV chassis, VCR Mechanical and Electronic Problems and so on.

It would have been nice to see a chapter on repairing computer monitors as these are renowned for having no service information available. However, much of the information in the two chapters on TV servicing is applicable. Nor is there any information on switchmode power supplies which are now universal in TVs, computers and computer monitors.

Throughout the book there are many circuit excerpts which are used to illustrate fault-finding. These are clearly drawn and easy to follow. There are also many black and white photos and while their quality is fairly average, they do serve as good illustrations to the text.

Overall, we can recommend the book as a very useful aid to anyone wishing to get into electronic servicing, whether as a hobby sideline or as a full-time business. As it points out, a great deal of servicing is done without the aid of a circuit.

RF circuit design handbook

Secrets of RF Circuit Design, by Joseph J. Carr. 3rd edition published 2001 by McGraw-Hill, USA. Soft covers, 186 x 233mm, 534 pages. ISBN 0 07 137067 6. Price $84.95.

For anyone interested in RF circuits there are very few sources of information on design, apart from the applications literature accompanying some semiconductor devices. This makes this text very welcome as it deals with a great deal of basic RF technique which is applied in most RF equipment whether it is an AM/FM portable radio or a complex communications receiver.

By the way, all of the book applies to RF reception circuitry rather than to transmitters, so if you are keen to learn more about transmitters, there is not a lot that is really applicable in this text.

Having said that, there is a huge amount of material in this text. It is easy to read, well illustrated and has very little mathematics content so the beginner can read it without being put off by formulas.

All told, there are 27 chapters and while I don't propose to list them all, a selection of headings gives a good idea of the breadth of content. Some of the chapter headings are as follows: RF Components and Tuned Circuits, Winding Your Own Coils, Direct Conversion Receivers, RF Amplifier and Preselector Circuits, Building Signal Generator and Oscillator Circuits, RF Directional Couplers, RF Hybrid Couplers, Filtering Circuits against EMI, Measuring Inductors and Capacitors at RF, Impedance Matching, Using the Double-Balanced Mixer, Time-Domain Reflectometry on a Budget, The Smith Chart and Detector and Demodulator Circuits.

Some of the circuit examples could be used as the basis for practical circuits although there are no PC board layouts and these are usually critical to the success of many designs.

All circuit examples are clearly drawn and well laid out, which is a great aid to understanding what is going on.

All told, this a useful text for the beginner or student approaching the world of RF. I can recommend it. (L.D.S.)

SERVICEMAN'S LOG

A tangle of faults in jungle ICs

Perhaps because of their complexity, faulty jungle ICs are now a common problem in colour TV sets. I repaired sets with two such faults this month but my first story is about a very noisy notebook PC.

I was sure I had fixed her notebook computer a year or so before, so when she recently came through the door with an HP Omnibook 5700CT F1350A in one bag and all her software and accessories in another, I was afraid that I might have done something wrong. Perhaps it was her serious facial expression that made me come to this conclusion but she was pleasant enough.

Penelope Mosman runs a firm of accountants and sure enough, I had fixed her machine before. Her problem now was that the notebook was making extraordinary and alarming noises and she thought that it might be the hard drive I had replaced last year.

I told her unconvincingly not to worry and that I would get onto it as soon as possible.

When I had the chance, I connected it all up and switched it on. I confess I was expecting the worst but was amazed when it booted it up perfectly. The computer was loaded with Windows 95B and everything was there and working properly.

Anyway, I decided to run a few diagnostic utilities which needed to be installed by CD-ROM. This HP machine can be booted with either a CD-ROM or a floppy drive connected, so I closed it down, fitted the CD-ROM drive and rebooted.

As it booted up, I noticed how microphonic it was but everything continued to work properly. After loading the software it required a further reboot. But this time, as Windows was loading, it suddenly developed a really loud high-pitched noise that was deafening.

My first reaction was to try to turn it down but I couldn't immediately discern where it was coming from. Finally, when I had consulted what little commonsense I have left, I found that the sound was coming from the tiny internal stereo loudspeakers. And it was quite surprising just how much noise they were making – others in the same room and beyond were shouting at me to turn that ruddy noise down.

The only volume control on the computer itself that I could find was a pair of function keys. I was madly pushing the volume down buttons as fast as I could but this made no difference. In the end, I stuffed some rags over the loudspeakers and shut the computer down.

This was rather bizarre and I began looking at the computer more closely. There was no other volume control – not even on the CD-ROM player. However, I did notice a bank of three sound sockets on the side, so I got a 3.5mm stereo jack plug that fitted and kept it handy, because I knew I was going to have to go back in. When it booted up again, the noise returned, but I could now turn it off by inserting the plug in the external speaker socket when it got too much.

Next, I tried the Windows 95 volume control and turned it right down and even muted it, but still the noise wouldn't go away. However, it appeared that tapping the case could make it go away and I began to suspect an internal dry joint.

By now, I was beginning to recognise that the noise might also be due to acoustic feedback. I found the tiny hole which the microphone hides behind and covered it with a dense cloth. This reduced the noise considerably and so, to confirm this hypothesis, I pushed the 3.5mm jack plug into the external microphone input. The sound ceased immediately.

Taking stock

It was time to take stock of the situation and try to work out what was happening. This hideous noise was being caused by acoustic feedback from the speakers to the microphone. But why didn't the software and hardware volume controls work? And why was it alright with the floppy drive inserted and not the CD-ROM? Something was obviously not quite right.

I retried with the floppy disk instead of the CD-ROM several times and soon found that I could also get the noise with that as well. By now, I was fairly convinced that there was a dry joint or a crack somewhere near the CD/floppy drive input connector.

At this point, the only thing I could do was to go in and find out. Now anyone who has had a go at repairing notebooks will, like me, have a fear of doing this. There are all sorts of concealed clips and screws which make it very difficult for anyone with no experience to disassemble (and later reassemble) this type of machine.

Anyway, I persevered and successfully removed the keyboard and escutcheon. I then unplugged the mini-

Items Covered This Month

- HP Omnibook 5700CT laptop computer.
- Mitsubishi CT-29AC1 colour TV.
- Sony KV-XF25M30 colour TV.
- Panasonic TC-29R20A colour TV (C-150 chassis).
- Panasonic TC-28PS10 colour TV.

ature ribbon connections and eventually had the whole thing in pieces in front of me. The only trouble was, I couldn't find any dry joints or cracks. Perhaps it was the plugs and sockets not making good contact?

Anyway, I couldn't find anything wrong and eventually reassembled it, making sure everything fitted together properly. When I switched it on, everything seemed to work initially but unfortunately it didn't take long for the howling to return.

By now, this was turning out to be another economic disaster – especially as I already had a "fix" for it in the form of the 3.5mm plug. And being an accountant, it was extremely unlikely she would need either the microphone or speakers together.

As a last resort, I decided to have another look at the software. Double clicking the volume control in the System Tray on the righthand side of the taskbar brings up the Volume and Balance controls. Under "Options", "Properties" there is a radio button for "Recording" which produces a new mixer panel when the "OK" button is clicked.

It was here that I found that the microphone balance control had been turned fully up. I reduced this to its normal level and this finally fixed the problem.

Why it was intermittent is hard to explain but it was probably due to the threshold of the feedback which varied according to how the unit was handled. I also suspect that the material used to make the CD-ROM drive was probably more resonant than in the floppy drive.

Anyway, that is my explanation and I'm sticking to it.

The trivial & mundane

Though it has been a busy time in our little family business, the jobs recently have all had faults that have been routine and mundane. Alternatively, they have had symptoms and causes I have written about before. Many times, I have started doing a repair, excited that the outcome might be of interest to everyone, only to find that the cause is trivial and boring – so much so that you kick yourself for not latching on to it sooner.

Then, of course, you meet and deal with the many different characters who can and do add twists to the service you are offering. In fact, this is sometimes more interesting than the work itself. From an income point of view, a boring month is a good one with a quick turnover. An interesting month is usually less profitable, hence the Chinese proverb/insult "May you live in interesting times!"

The Mitsubishi CT-29AC1

One of the more interesting jobs I've had is Mr Landhurst's Mitsubishi CT-29AC1, which came in with intermittent no sound and no luminance. This is quite a nice TV although this particular unit had not been well looked after – the set was dirty and extremely dusty, as well as being slightly rusty from being not far from the sea.

I connected a colour bar generator into the AV sockets and followed the luminance signal through with the oscilloscope. I started at the AV switch board and went onto the H-RESO board and finally went all the way to the jungle IC.

Jungle ICs are very complex these days and can develop very weird faults. In fact, it's got to the stage where they are becoming one of the most common causes of problems in TV sets. In this case, though it was highly suspect, I decided to measure the voltages around the luminance section. I soon found pin 57, the luminance clamp pin, to be low and subsequently that the voltages on Q201 were also wrong. I traced this further to transistor Q306 ("P-off, Mute"), near the tuner.

Although I had run the air compressor through the back of the set before I started, I hadn't been particularly diligent around Q306. I blew it out again, then removed and measured the transistor with an ohmmeter. It read OK but the legs were slightly tarnished.

Anyway, I resoldered it back in the set and switched it on. The set burst into life with an excellent picture. I went back to the transistor and measured the voltages – all were correct now. I then hit Q306 with freezer and then the hairdryer but the set was working fine now. I can only assume that a combination of dust and salt had caused the fault but to be on the safe side, I replaced the transistor and soak tested the set.

I advised Mr Landhurst to cover his set when he wasn't watching it and

keep it away from open windows on the sea-side of his home.

A weird Sony

The next set I had to deal with was a Sony KV-XF25M30 which had a weird symptom. I can only describe it as being like the teeth of a woodsaw on the verticals, with jagged vertical lines all over the screen.

At first I thought it was something to do with the line output stage. However, when I put the scope on pins 7 & 9 of the jungle IC (IC301), the normal colour bar staircase was scrambled with what appeared to be another signal superimposed on top of it. Interestingly, though, the sync pulses were rock solid. I tried disconnecting these pins but both luminance and chrominance go through them and the signal was no longer available.

Next, I spent some time investigating the comb filter circuit but found nothing wrong. Finally, I ordered another jungle IC. The new one fixed the problem.

A crook Panasonic

I had to go and visit a Panasonic TC-29R20A (C-150 chassis) with the complaint that the colours were poor, especially peoples' faces. When I arrived and had a good look, I could see there was very little red in the picture – but I wasn't sure whether it was no red or no R-Y which would create the fault in the colour decoder as opposed to the RGB output stages. I didn't have a colour bar signal generator with me but being reluctant to cart it off to the workshop, I decided to have a go.

After taking the back off, I got Mr Humber to watch the screen while I momentarily shorted the red cathode of the tube to ground. He reported that there was a flash of bright red on the screen, so that absolved the picture tube. I then checked the voltages of the cathodes to find the red pin to be high, as I had expected. I swapped the red and green transistors over and made sure that the plugs and sockets to the motherboard were all OK but this didn't reveal where the fault lay.

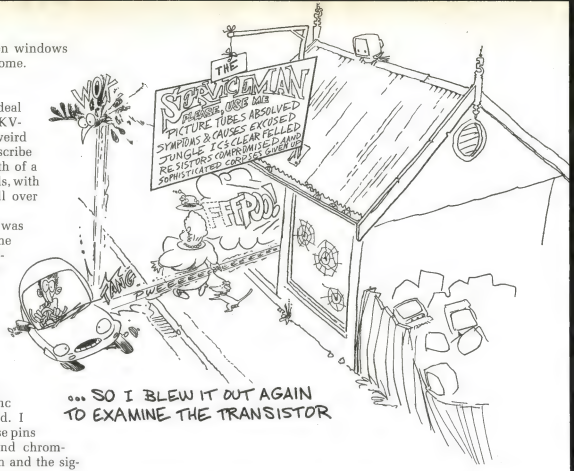
THE
SERVICEMAN
WOW
ZANG
TWEEE

Panasonic TC-2969S (M150 chassis), that came in with weak contrast. This set was really past its use-by-date and the lack of contrast could easily have been due to a low-emission picture tube.

However, apart from all the dry joints this set had, the usual solution to this is the well-known R525 resistor connecting the +113V rail to the beam limiting circuit. This resistor has a habit of going high – not surprising really, considering it is such a small size (1/8W or less).

The main difficulty is identifying the value of R525, because it varies from model to model (due to the size of the picture tube). This particular set had (I think) orange, orange, yellow, gold, making 330kΩ. The service manual said it should be 91kΩ for 29-inch sets.

In the end, I compromised by using 100kΩ, which seemed to improve the picture enough considering the age of the picture tube.

Monitor repairs

I am still repairing computer monitors but the time I am going to spend on them from now on is going to be limited. Frankly, I am fed up with trying to support manufacturers who are determined not to support us or their clients. There are far too many companies importing computer monitors and then dumping them in Australia without any service back-up at all – including no service manuals and no spare parts.

How they are allowed to do this is beyond me, with even many supposed reputable brands doing it too. My shop is littered with the corpses of sophisticated digital monitors (many large screen sizes) and in some cases I can't even find out who the importer was let alone obtain a manual.

One in particular stands out in my mind – a Shamrock SRC2102L, which is a 1994 21-inch digital monitor. The owner bought it secondhand and I believe it might be a Hitachi but can get no information whatsoever from anywhere on it.

The set was dead with a flashing green LED on the front. I found the line output transistors Q609 (two 2SC5048 in parallel!) short circuit – well, actually, it was only one of them but it might just as well as been both. In fact, I'm not even sure whether there should be two of them because someone else may have made a modification – or was it designed that way?

That didn't fix the problem, so I concentrated on the power supply board. This is a dual-FET switchmode design and one of the FETs (Q102, 2SK1723) was short circuit, in turn taking out R105, Q108 and D107. I replaced these and all the small electros and the power supply and the green LED would now come on. However, there was no +85V to the line output stage (I say +85V but I can't be sure what voltage it is because I can't get the circuit).

Anyway, it appears that half the power supply (the one that blew up) still wouldn't come on – probably because of the Green Energy circuit tied up with the sync from the computer's VGA card.

Now the monitor is probably a multisync type and has five BNC sockets on the rear, as well as a 9-pin D connector. The cable and instruction book were not supplied with the monitor, so I had to guess again what type of cable was required. I tried a standard multisync 9-15 pin cable but that didn't want to work, so I can only assume that it has a non-standard pinout.

I then tried the BNC to 15-pin D connector and had a better luck with this. The connectors are Red, Green + Sync, Blue, Horizontal and Vertical pulses, Vertical pulses – the signifincant one being the Green lead. With that connected, you can hear a relay click in and out – but still no +85V or EHT. I gave up at that stage – life is too short and this job was just too hard and I can't see the money in it for all my efforts. **SC**

Semtron Electronics Pty.Ltd

DISCOUNTED TV Video Audio Components and Accessories

Over 10,000 lines

- Semiconductors
- Capacitors - Fuses
- Line Output Transformers
- Video Heads - Belt Kits
- Audio - Turntable Belts
- Microwave Oven Parts
- CD Lasers & Spindle Motors
- Service Manual Library
- Leads - Plugs & Sockets
- Metro Same Day Delivery
- Free Backorder Delivery
- Small Volume Discount

VISA MasterCard Bankcard

Friendly Professional Service
Ask for Rick, Helen or Margaret

Ph. 02 9873 2627 or 02 9872 8287

Fax. 02 9872 6084

email. semtron@optusnet.com.au

Using Linux To Share An Internet Connection; Pt.2

Last month, we looked at connecting a small local area network to a Linux box, intended for use as an gateway so that all the machines could share an Internet connection. This month, we are going to connect the Linux box to the Internet, configure it for demand dialling and set up a firewall.

By GREG SWAIN

There's a lot to think about when setting up an Internet gateway for a small LAN. One thing that you definitely don't want it to do is hold the line open indefinitely if you forget that you're connected – and maybe run up a big bill with your ISP (Internet Service Provider) in the process!

Similarly, you don't want it repeatedly dialling out, connecting and disconnecting, if there is something wrong at your ISP's end. This could be a real problem if you run a program that automatically triggers dial-outs according to a preset schedule – eg, an email server that regularly connects to send and retrieve email.

A 20-cent local call mightn't sound like much but several thousand calls made at 1-minute intervals over a long-weekend will give you a real pain in the wallet. Do the sums – ouch!

This Linux gateway overcomes the above problems by automatically disconnecting after a preset "idle" time (ie, when there has been no Internet traffic) and by limiting the number of unsuccessful connection attempts. You can adjust both the idle time and the number of connection attempts to your liking.

Another important thing to be considered is security. There are plenty of bad guys out there on the Internet, just waiting to hack their way in and wreak all kinds of havoc. We'll tackle that problem as well.

Actually, we're going to cover a fair bit of ground this month to get the gateway working. First, we're going to set up the modem, then we're going to get pppd (the point-to-point protocol dialler) working. After that, we're going to cover demand dialling, IP masquerading, IP forwarding and firewalling.

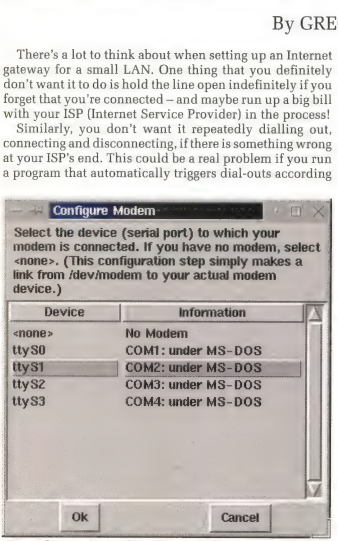

Fig.14: the "modemtool" utility is used to create the link between your modem and the file */dev/modem* by selecting the relevant serial port.

What is IP masquerading?

"IP masquerading" might sound intimidating but the concept is really very simple. Our problem is that we want to give all the client machines on our network simultaneous Internet access. But how do we do that when each client has a different IP address – especially when 192.168.0.x IP addresses are not valid on the Internet?

The answer is to use IP masquerading. This "hides" the real IP packet addresses coming from the clients, so that it appears that everything is coming from a single machine; ie, the Linux box. This is done by translating local IP packet addresses into a valid Internet IP number before relaying the packets out onto the Internet.

Conversely, IP masquerading translates any incoming packets into local addresses, so that they can be correctly forwarded to the client machines.

Where does the valid Internet IP number come from? Answer – it's dynamically assigned by your ISP to the PPP adapter in the Linux box each time it dials out and connects. This means that your Linux box has two IP numbers while ever it is connected to the Internet – a valid IP address bound to the PPP adapter and a static IP (ie, 192.168.0.2) bound to the network card (eth0).

It's the IP number assigned to the ppp adapter when you connect that your ISP recognises (not the IP numbers of the individual clients). Basically, IP masquerading works transparently in the background, translating IP addresses back and forth between the dynamically assigned Internet IP number and the IP addresses of the clients. It's really all something of a masquerade – hence the name "IP Masquerading".

IP Masquerading is carried out in Linux using a program called "ipchains" (older distributions of Linux used "ipfwadm"). This program is also used for building a firewall so the rules are often bundled together in a single script file. More on this later.

By the way, IP masquerading is virtually the same as Network Address Translation (NAT), as used by Microsoft's Internet Connection Sharing (ICS) utility.

You need this info

Before getting down to the nitty-gritty, you'll need to have all your ISP account information. This includes: your username and password, the dial-in telephone number, the IP numbers for the ISP's nameservers or Domain Name Servers (DNS), and whether your ISP uses PAP (password authentication protocol) or CHAP (challenge authentication protocol) when logging on.

Most ISPs use PAP authorisation but don't sweat it if you don't know which method your ISP uses – it's easy to cover both bases.

You will also need the name of the proxy server (if used by your ISP) and the names of the mail and news servers. These names are required when setting up Internet Explorer (or Netscape) and any email programs on the client computers.

Modem configuration

OK, now that the network is running and you have all the account details, let's hook the Linux box up to the net. First, we have tell Linux which COM port the modem is connected to.

In Linux, the four COM ports are designated **/dev/ttyS0** to **/dev/ttyS3** and these correspond to serial ports COM1 - COM4 respectively under Windows. This means that if your modem is connected to COM2 under Windows, it's on ttyS1 under Linux.

What we have to do is create a link between the relevant serial port and */dev/modem*. In Red Hat, this can be done using a utility called "modemtool".

To run it, type **modemtool** in a terminal window and select the port that your modem is connected to, as shown in Fig.14.

Connecting with kppp

By far the easiest way of connecting to the net if you are running KDE is to use the graphical Kppp connection program. Alternatively, for Gnome users, there's the Red Hat PPP tool (also known as "rp3"). PPP stands for "Point-to-Point Protocol" and is the standard for connecting to the Internet. Another component known as "pppd" is the dialler portion of PPP.

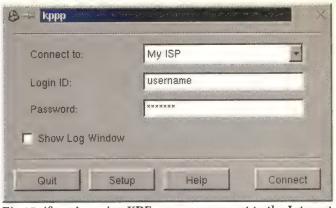

Fig.15: if you're using KDE, you can connect to the Internet using the graphical Kppp utility. Unfortunately, you can't use Kppp for demand dialling.

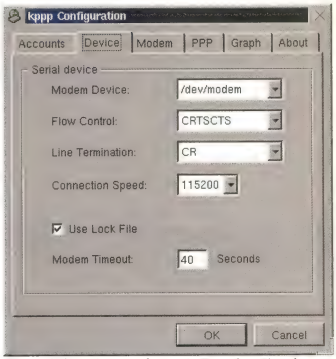

Fig.16: clicking the setup button in Kppp (see Fig.15) brings up this dialog box so that you can initially setup all the information for your ISP account.

To launch Kppp, click **K -> Internet -> Kppp, then click the Setup -> New** to set up a new account. You'll need to enter in all the details of your ISP, including the phone number, nameserver (DNS) addresses, your log-in name (or username) and password – see Fig.15.

You will also need to choose which serial port the modem is connected to and whether you're using PAP or a login script.

When you've filled in all the details, click the Connect button and check that Kppp dials out and makes the connection. You can then set up Netscape Navigator,

which is installed by default, to browse the web and send and receive email.

Setting up Netscape Navigator simply involves specifying any proxy servers, as required by your ISP, and setting up your email (and news) accounts. You get to the settings dialog boxes in Netscape by clicking **Edit -> Preferences**.

And while we're talking about proxy servers, here's a worthwhile tip. On several occasions, I've found that when you attempt to enter proxy server settings into Navigator, it returns an error message saying that the proxy server is unknown. The trick is to log onto the Internet first – then when you click OK to save the proxy setup, Netscape can actually find your ISP's proxy server and will accept the settings. Aaaaaaarghhh!!!

Connecting without Kppp

Unfortunately, being able to connect to the net using Kppp doesn't count if you want demand dialling. Instead, you have to first edit a few script files to that you can bring up the link (ie, make the modem dial out and connect) by typing **pppd** at a terminal window.

Once that's working, you then modify one of the script files so that pppd runs in the background and dials out only on demand.

By the way, it's best to do all your editing under Linux. Don't try to create the files on a Windows box and copy them across because Linux treats the end of line carriage returns differently. You can edit your files using the Advanced Text Editor (just click the pencil icon on the task bar).

The files that we have to edit are as follows:

(1) /etc/resolv.conf
(2) /etc/ppp/chat-script
(3) /etc/ppp/options
(4) /etc/ppp/pap-secrets
(5) /etc/pppchap-secrets

Before starting, make sure you're logged in as root and that X-Windows is running. You should also make sure that the linux kernel includes ppp support. To check this, type **lsmod** at a terminal window and check that PPP appears in the list. If it doesn't, type **modprobe ppp** to load PPP support.

OK, let's roll up our sleeves and get started. The first step is to add your ISP's nameserver addresses to the */etc/resolv.conf* file. Your file should look like this:

Script 1: /etc/resolv.conf

```
domain [your ISP's domain name]
nameserver 192.168.54.26
nameserver 192.168.54.37
```

We've used fictitious IP addresses here – you must use the actual IP addresses of your ISP's nameservers. Replace [your ISP's domain name] with the correct name – eg, **connect.com.au** (be sure to leave out the square brackets here and for any other examples below).

Nameservers play a vital role when it comes to navigating the Internet. Basically, their job is to translate names into their corresponding IP numbers. This means, for example, that you can go to the SILICON CHIP website by typing in **www.siliconchip.com.au** instead of entering in the IP address: **203.43.52.165**.

OK, so pppd now knows where to do name lookups. We now need to create a dialling script, so that it knows which phone number to dial and what to do if errors are encountered. Assuming your ISP uses PAP (or CHAP) authentication, create a file called */etc/ppp/chat-script* and put this into it:

Script 2: /etc/ppp/chat-script

```
TIMEOUT 5
ABORT "BUSY"
ABORT "NO CARRIER"
ABORT "NO DIALTONE"
ABORT "ERROR"
ABORT "NO ANSWER"
TIMEOUT 40
"" ATDT[dialup number]
CONNECT ""
```

Replace [dialup number] in the script with your ISP's phone number (without the brackets).

The first line resets pppd after 5 seconds if an "abort" error is encountered. The following "abort" lines are standard Hayes commands – these instruct the modem to abandon the connection attempt if errors are encountered; eg, if the line is busy or there's no dialtone.

If no abort errors are encountered, the timeout is reset to 40 seconds, which should be ample time for the modem to connect and go through the handshaking and log-on routines. You can increase the timeout values if necessary.

Some modems may require an initialisation string (look in the manual. If so, you can place
"" +++[initialisation string]
before the dial-out command line (ie, the line with your ISP's phone number).

If your ISP requires a log-on script, you will have to add the following two lines right at the end of the chat-script file (note: replace [username] and [password] with your own username and password):
ogin: [username]
ord: [password]

Next, we need to place some commands into the */etc/ppp/options* file so that pppd can control the connection. Open this file with a text editor and make it look like this:

Line 1 tells pppd to use the **chat-script** file to make the

Script 3: /etc/ppp/options

```
connect "/usr/sbin/chat -v -f /etc/ppp/chat-script"
/dev/ttyS1 115200
modem
crtscts
lock
noauth
defaultroute
noipdefault
user [username]
idle 600
```

connection; line 2 defines the serial port that the modem is connected to and the speed (use 115200 for 56Kb modems and 38400 for 33.3Kb modems); line 3 sets up hardware handshaking control (crtscts); line 4 locks the modem to prevent other programs from accessing it; and line 5 prevents pppd from asking the ISP host to authenticate itself (most won't).

Lines 6 & 7 tell pppd to create a default route and to accept IP numbers assigned to the Linux box by your ISP, while line 8 passes your username to the ISP – replace [username] with your real username.

Finally, line 8 tells pppd to hang up after 10 minutes of inactivity. You can set the "idle" timeout to any value you like but anything less than 10 minutes can give unwanted hang-ups during periods of inactivity.

Authentication

During the log-on process, pppd sends your username and password to the ISP so that the connection can be authenticated. This is done by reading either the ***/etc/ppp/pap-secrets*** file (for PAP authentication) or the ***/etc/ppp/chap-secrets*** file (for CHAP authentication). In fact, it's common practice to define your username and password in both files, so that you don't have to worry about which of the two authentication protocols is used.

You need to add just one line to both the ***/etc/ppp/pap-secrets*** and ***/etc/ppp/chap-secrets*** files as follows:

Scripts 4: /etc/ppp/pap-secrets & chap-secrets

```
# Secrets for authentication using PAP (CHAP)
[username] * [password]
```

Once again, replace [username] and [password] as required (eg, bsmith * red789).

Testing the connection

OK, let's see if all this works. Pretend that you're using a Windows box, reboot, log on as root, go to a terminal screen and type: **/usr/sbin/pppd**

Your modem should immediately dial out and connect to your ISP. Assuming it works, try pinging an address on the Internet (eg, ping www.siliconchip.com.au). Don't leave the connection up for too long or someone may hack their way into your unprotected machine. We'll build a firewall shortly.

To disconnect, enter this command: **killall pppd**

Dial on demand

Now that you can connect by typing pppd at a terminal window, let's make it dial on demand. The easiest way to do this is to use the "demand" option that's now included with ppp (since version 2.3.7). Red Hat 6.2 or later includes this option but users of older Linux versions may have to upgrade.

All you have to do is add a few lines to to ***/etc/ppp/options*** file so that it now looks like this:

It's the "demand" statement that tells pppd to dial only on demand (funny, that!). Now, when you type **/usr/sbin/pppd** in a terminal window, the modem no longer dials out immediately. Instead, pppd runs in the background and activates the dialler only when Internet access is requested.

Modified Script 3: /etc/ppp/options

```
debug 31
connect "/usr/sbin/chat -v -f /etc/ppp/chat-script"
/dev/ttyS1 115200
modem
crtscts
lock
noauth
defaultroute
noipdefault
user [username]
192.168.5.254:192.168.5.1
ipcp-accept-remote
ipcp-accept-local
demand
maxfail 4
idle 600
holdoff 5
```

The two IPs specified in the ***/etc/ppp/options*** file are bogus and are replaced by dynamically-assigned IP addresses during the log-on procedure (one for either end of the link). The two "ipcp-accept" lines ensure that pppd accepts the new IP addresses.

The "maxfail 4" statement sets the number of unsuccessful connection attempts to four. This prevents the unit from continuously dialling out if there is a problem and running up that big phone bill we talked about earlier.

If the maxfail value is reached, pppd exits and has to be restarted manually on the Linux box to activate demand dialling again.

As before, the "idle 600" statement disconnects the link after 600 seconds (10 minutes) of inactivity, while the "holdoff 5" line makes pppd wait for five seconds before trying to re-establish a link after it disconnects (this does not apply to idle disconnects).

You might like to initially set the idle period to a low value (eg, 60), so that it's easy to check that the line does indeed disconnect after the set period of inactivity. Once you've established that it works OK, you can go back and increase the value to 600.

By the way, you don't have to restart pppd after a timeout disconnect. Instead, pppd continues to run in the background, waiting for the next dialling request – which is just what we want. You do, however, have to restart pppd if you issue a disconnect command from a terminal window.

Normally, in an office setup, you'll simply let the connec-

Starting X Windows Automatically

If you didn't choose the graphical login option during installation and subsequently change your mind, you can make the system boot straight into X Windows by editing the file ***/etc/inittab*** with a text editor. Look for the first uncommented line which reads id:3:initdefault: and change the 3 (multiuser) to a 5 (graphical).

Conversely, change the 5 to a 3 if your system boots straight into X Windows and you want it to boot to multiuser level.

Script 5: /etc/rc.d/rc.firewall

```
#!/bin/sh
# Firewall & Masquerading Script

ANY=0.0.0.0/0

# Flush all existing rules
/sbin/ipchains -F input
/sbin/ipchains -F forward
/sbin/ipchains -F output

# Set default policy to deny everything
/sbin/ipchains -P input DENY
/sbin/ipchains -P forward DENY
/sbin/ipchains -P output DENY

# Enable IP forwarding and defragging protection
echo "1" > /proc/sys/net/ipv4/ip_forward
echo "1" > /proc/sys/net/ipv4/ip_always_defrag
echo "1" > /proc/sys/net/ipv4/ip_dynaddr

# Enable IP masquerading timeouts
/sbin/ipchains -M -S 7200 10 180

# Enable IP masquerading for the local 192.168.0.x network
/sbin/ipchains -A forward -s 192.168.0.0/24 -j MASQ

# Accept all packets on the loopback interface
/sbin/ipchains -A input -p all -i lo -j ACCEPT
/sbin/ipchains -A output -p all -i lo -j ACCEPT

# Allow all traffic on the local network
/sbin/ipchains -A input -p all -i eth0 -j ACCEPT
/sbin/ipchains -A output -p all -i eth0 -j ACCEPT

# Set up rules for Internet (ppp0) traffic
# (1) Allow all packets out
/sbin/ipchains -A output -p tcp -d $ANY -i ppp0 -j ACCEPT
# (2) Accept return packets
/sbin/ipchains -A input -p tcp -s $ANY -i ppp0 ! -y -j ACCEPT
# (3) Accept incoming ftp-data connections (for outgoing active ftp)
/sbin/ipchains -A input -p tcp -s $ANY ftp-data -d $ANY 1024:65535 -i ppp0 -y -j ACCEPT
# (4) Allow UDP packets out (necessary for DNS lookups)
/sbin/ipchains -A output -p udp -s $ANY -d $ANY -i ppp0 -j ACCEPT
# (5) Accept UDP packet responses
/sbin/ipchains -A input -p udp -s $ANY -d $ANY -i ppp0 -j ACCEPT
# (6) Reject any incoming authorisation requests
/sbin/ipchains -A input -p tcp -d $ANY auth -i ppp0 -j REJECT

# Allow outgoing and incoming ping
/sbin/ipchains -A output -p icmp -s $ANY -d $ANY -i ppp0 -j ACCEPT
/sbin/ipchains -A input -p icmp -s $ANY -d $ANY -i ppp0 -j ACCEPT

# Block samba housekeeping traffic from triggering pppd autodial
/sbin/ipchains -A forward -s $ANY 137:139 -p tcp -j DENY
/sbin/ipchains -A forward -s $ANY 137:139 -p udp -j DENY

# Support masquerading of FTP file transfers, IRC, RealAudio, etc; uncomment lines to load required modules
/sbin/depmod -a
/sbin/modprobe ip_masq_ftp
```

continued next page

rc.firewall script! – continued

```
/sbin/modprobe ip_masq_raudio
# /sbin/modprobe ip_masq_irc
# /sbin/modprobe ip_masq_cuseeme
# /sbin/modprobe ip_masq_quake 26000,27000,27910,27960
# /sbin/modprobe ip_masq_vdolive

# Set telnet, www, smtp, pop3 and FTP for minimum delay
/sbin/ipchains -A output -p tcp -d $ANY 80 -t 0x01 0x10
/sbin/ipchains -A output -p tcp -d $ANY 22 -t 0x01 0x10
/sbin/ipchains -A output -p tcp -d $ANY 23 -t 0x01 0x10
/sbin/ipchains -A output -p tcp -d $ANY 21 -t 0x01 0x10
/sbin/ipchains -A output -p tcp -d $ANY 110 -t 0x01 0x10
/sbin/ipchains -A output -p tcp -d $ANY 25 -t 0x01 0x10

# Set ftp-data for maximum throughput
/sbin/ipchains -A output -p tcp -d $ANY 20 -t 0x01 0x08

# Log everything else to syslog and drop the packet
ipchains -A input -l -j DENY
ipchains -A output -s $ANY -d $ANY -l -j DENY
```

Download From Our Website

The following script files are available for download from the SILICON CHIP website at www.siliconchip.com.au:

- /etc/ppp/chat-script
- /etc/ppp/options
- /etc/rc.d/rc.firewall

tion time out so that you don't have to continually restart pppd. It's also a nuisance to have to manually restart pppd each time the machine boots; far better to have it start automatically each time the machine boots. We do that by adding the **/usr/sbin/pppd** command to the ***/etc/rc.d/rc.local*** file as described later.

You can test all this by restarting pppd and then pinging the IP address of your ISP's primary nameserver (from the Linux box). For example, if your ISP's primary nameserver is at 192.168.54.26, type: **ping 192.168.54.26**

Alternatively, you can try pinging a named web address; eg: **ping www.yahoo.com**

The modem should dial out after a brief pause and you should get a response after the connection has been made. Enter **<Ctrl> C** to stop the pinging and **killall pppd** to make the modem disconnect.

IP masquerading & building the firewall

There is no gateway yet – you can dial out from your Linux box but there's still no Internet access for the Windows machines. We're going to fix that problem right now by turning IP forwarding on and enabling IP Masquerading.

IP forwarding is normally disabled by default. There are several ways of turning it on but this method works with any version of Linux. All you have to do is add the following line to a startup script:

```
echo "1" > /proc/sys/net/ipv4/ip_forward
```

In our case, we've included this line in a script file called ***/etc/rc.d/rc.firewall***. The command to turn on IP masquerading is also included in this file, along with all the firewall rules. The file is shown in Script 5.

Don't leave out the "#!/bin/sh" statement at the start of ***rc.firewall*** – this invokes the native Linux shell interpreter to process the rest of the script. Save the script and make it executable by issuing the following command at a terminal prompt to change the file's permissions:

```
chmod 700 /etc/rc.d/rc.firewall
```

This command makes ***rc.firewall*** readable, writable and executable by root.

How the firewall works

There are two approaches to building a firewall: (1) start by allowing everything in and then blocking what we don't want; or (2) start by blocking everything and then allowing in what we do want.

The firewall listed here adopts the latter approach. Basically, it's designed to allow only outgoing connections so that you can browse the web, send and receive email and retrieve ftp files, etc. Conversely, it blocks incoming connections to prevent a hacker from using your Linux box as a server or for some other purpose.

If you do want to use the Linux box as a server (eg, as an ftp or web server), it's simply a matter of adding a few additional rules to the firewall script.

The firewall begins by flushing all the existing rule tables, then sets the default policy to deny all incoming, outgoing and forwarded IP packets. The first echo command then turns on IP forwarding, while the next line turns on IP defragging (this enhances security). The third echo command is recommended if you receive a dynamic IP address from your ISP – delete this line if you have a permanent Internet connection with a fixed IP address.

Next, the script sets the masquerading timeouts and enables IP masquerading for the 192.168.0.x network. The following four rules then tell ipchains to allow all internal packets on the loopback (lo) interface and the local network (eth0), before setting up the rules for Internet traffic (ie, the ppp0 interface).

There are six rules here. Rule 1 allows all IP (tcp)

Fig.17: typing *route -n* in a terminal window brings up the routing table. This figure shows what the routing table looks like when the Linux box is connected to the Internet.

```
root@penguin: /root
File  Sessions  Options  Help
[root@penguin /root]# route -n
Kernel IP routing table
Destination     Gateway         Genmask         Flags Metric Ref    Use Iface
210.9.191.95    0.0.0.0         255.255.255.255 UH    0      0        0 ppp0
192.168.0.0     0.0.0.0         255.255.255.0   U     0      0        0 eth0
127.0.0.0       0.0.0.0         255.0.0.0       U     0      0        0 lo
0.0.0.0         210.9.191.95    0.0.0.0         UG    0      0        0 ppp0
[root@penguin /root]#
```

packets to go out to the Internet, while rule 2 allows the return packets (but only the return packets) back in. The next rule accepts incoming ftp data and is necessary for active ftp connections – you can increase security by commenting this line out (or deleting it) if you use passive mode ftp only.

Rules 4 & 5 are necessary for DNS (udp) lookups, while rule 6 tells ipchains to reject unauthorised connections from external sources to the ppp0 interface.

The next two rules are necessary to allow outgoing and incoming ping (icmp) requests – comment these rules out if you don't need this facility. Following this, ipchains is instructed to block local Samba "housekeeping" traffic from unnecessarily triggering autodial. You can leave these lines in place, even if you don't have Samba set up on the Linux box for file and printer sharing.

After that, the firewall loads specialised modules required for various services, such as FTP, IRC, RealAudio, Quake and CuSeeme. It then sets up minimum delays for various services and sets outgoing ftp data transmissions for maximum throughput. Finally, all other incoming and outgoing traffic requests are blocked and logged.

This firewall should be quite effective at blocking out any nasties (no guarantees though). If you want something fancier or want to set up your Linux box as a server, take a look at the "IP Masquerading Howto", the "Ipchains Howto" and the "Security Howto".

Making it happen automatically

Want it all to happen automatically at boot-up? That's easy – just add the following lines to the end of the */etc/rc.d/rc.local* file:

```
# Enable IP masquerading and firewall
/etc/rc.d/rc.firewall
logger Firewall up

# Start pppd for demand dialling
/usr/sbin/pppd
logger Demand dialling started
```

The *rc.local* file is executed each time the computer boots, so pppd, IP masquerading, IP forwarding and the firewall are all loaded by default.

Now reboot your Linux box and log on as root – you should now have a working gateway. You can test it by launching a web browser on one of your Windows boxes, typing in an address and hitting <Enter>. The modem should dial out after a brief delay and connect.

Note that your browser will invariably time out while the modem dials and connects – that's normal with this type of setup. Give it time to connect, then reload the address and try again – everything will then work normally. In fact, once you're online, it will seem as though your Windows box is directly connected to the Internet. The Linux gateway will be completely transparent.

By the way, you can restart the firewall at any time while logged on as root by typing **/etc/rc.d/rc.firewall** (this can be handy for testing). You can also check the ipchains rules by typing **/sbin/ipchains -L** in a terminal window – see Fig.18. Switch off the modem if you run this command while offline, otherwise it will attempt to do a reverse DNS lookup and trigger a dial-out. If the modem is off, the chain input policy rules will scroll quickly through, then nothing more will be shown until the reverse DNS lookup attempt times out.

Typing **route -n** in a terminal window brings up the routing table – see Fig.17.

```
root@penguin: /root
File  Sessions  Options  Help
[root@penguin /root]# /sbin/ipchains -L
Chain input (policy DENY):
target     prot opt    source               destination          ports
ACCEPT     all  ------  anywhere             anywhere             n/a
ACCEPT     all  ------  anywhere             anywhere             n/a
ACCEPT     tcp  -y----  anywhere             anywhere             any -> any
ACCEPT     tcp  -y----  anywhere             anywhere             ftp-data -> 1024:65535
ACCEPT     udp  ------  anywhere             anywhere             any -> any
REJECT     tcp  ------  anywhere             anywhere             any -> auth
ACCEPT     icmp ------  anywhere             anywhere             any -> any
DENY       all  ----l-  anywhere             anywhere             n/a
Chain forward (policy DENY):
target     prot opt    source               destination          ports
MASQ       all  ------  192.168.0.0/24       anywhere             n/a
DENY       tcp  ------  anywhere             anywhere             netbios-ns:netbios-ssn -> any
DENY       udp  ------  anywhere             anywhere             netbios-ns:netbios-ssn -> any
Chain output (policy DENY):
target     prot opt    source               destination          ports
ACCEPT     all  ------  anywhere             anywhere             n/a
ACCEPT     all  ------  anywhere             anywhere             n/a
ACCEPT     tcp  ------  anywhere             anywhere             any -> any
ACCEPT     udp  ------  anywhere             anywhere             any -> any
ACCEPT     icmp ------  anywhere             anywhere             any -> any
           tcp  ------  anywhere             anywhere             any -> www
           tcp  ------  anywhere             anywhere             any -> ssh
           tcp  ------  anywhere             anywhere             any -> telnet
           tcp  ------  anywhere             anywhere             any -> ftp
           tcp  ------  anywhere             anywhere             any -> pop3
           tcp  ------  anywhere             anywhere             any -> smtp
           tcp  ------  anywhere             anywhere             any -> ftp-data
DENY       all  ----l-  anywhere             anywhere             n/a
[root@penguin /root]#
```

Fig.18: you can inspect the ipchains rules by entering the command */sbin/ipchains -L* in a terminal window but switch the modem off first to stop unwanted dial-outs. These are the rules for the firewall listed in Script 6.

Coming next month

OK, that's enough for now. Next month, we'll show you how to run pppd as a user, as it's not a good idea to be logged on as root. We'll also show you how to log the connection and describe how to make it all easy to drive.

When it's all done, you'll be able to start pppd or hang up the modem by clicking a couple of icons on the desktop or by typing a couple of simple command lines. **SC**

Winning Gold . . .
. . . After the Games. . .

HURRY! This is your LAST CHANCE to grab some of the equipment left over from the Sydney 2000 Olympic Games at never-to-be-repeated prices!

ALL PRICES INCLUDE GST

EX OLYMPIC SECURITY DURACELL 9 VOLT BATTERIES
Brand new (expiry dates 2004) Boxed lots of 48
$1.80 ea

EX OLYMPIC GENUINE MAG LITE TORCHES
Made in USA, complete with 240V battery charger kit and in car battery charger kit. As used by Police,
$180 ea

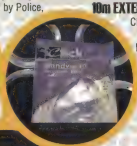

EX OLYMPIC 10m EXTENSION CORDS
CLICK type, 10A Brand new Boxed lots of 5
$10.00 ea

EX OLYMPIC SONY LCD PROJECTOR
CPJ500
$1800

EX OLYMPIC EZ PRO LCD PROJECTOR
$2200

EX OLYMPIC CHUBB DRY TYPE FIRE EXTINGUISHERS
1.5kg dry chemical, ideal for home or car.
$65 ea or 2 for $99

EX OLYMPIC TOA MEGAPHONES
Complete with shoulder harness and alkaline batteries
$79.00 ea

5.6" COLOUR LCD DISPLAYS
$418

EX OLYMPIC CRESCENT SCREWDRIVER SETS
13 piece in carry case
$35.00 ea

EX OLYMPIC HPM SURGE ARRESTORS
4-way outlet power boards, brand new
$15.00 ea

EX OLYMPIC XEROX COLOUR PHOTO COPIER/ PRINTER
$6200

OPTICAL GRADE INFRARED ACRYLIC SHEET
Pieces approx 100mm square. Ideal for checking infrared response of CCD cameras
$20.00 ea
AS ABOVE, 100mm DOMES $28.00 ea

OUTDOOR CAMERA HOUSING
$85.00 ea

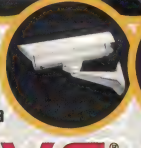

LONG RANGE PASSIVE INFRA RED
25 metre narrow beam (Heimann Pyro Element)
$30.00 ea

CALL NOW! 3 — AVS® 1 — DON'T MISS OUT! 2

AVS® – Registered Trade Mark - Australian Video Systems

PH: (02) 9879 6782 FAX: (02) 9879 6993

L'IL SNOOPER

If your security system has more than one CCTV camera but only one monitor, you really need an automatic "camera switcher" (or sequencer) to let you keep an eye on what's happening in each camera's field of view. This easy-to-build unit can handle up to four cameras and features variable rate scanning and a pause button, for when you need to study something interesting.

IDEALLY, EACH CAMERA in a CCTV system will have its own dedicated monitor – making it easy to watch and listen to what they're all seeing and "hearing". But video monitors aren't cheap and this approach is just too expensive for many of us.

Fortunately, there's an alternative: use just one monitor, together with a gizmo called an "AV sequencer" or "camera switcher". This works like a multiplexer or scanner, automatically cycling around between the cameras so that you get the video and audio first from camera 1, then from camera 2, then from camera 3 and so on. Each camera's signals are presented for a few seconds in turn, allowing you to keep an eye and ear out for anything of interest.

AV sequencers are available commercially, of course, but while they're much cheaper than additional monitors, they're still rather pricey. You'll be able to build L'il Snooper for much less than a commercial unit and you will have the satisfaction of knowing that you built it yourself.

L'il Snooper can handle the video and audio from up to four cameras and its scanning rate can be adjusted over a range of about 10:1 to suit different applications. It has a row of LEDs on the front panel to show which camera is being presented at any moment and there's also a "Pause" button. This button lets you stop the scanning and concentrate on just one camera if you spot or hear anything of interest from that unit.

Just about all of the parts used in L'il Snooper's circuitry fit on a small PC board, making it very easy to put together. The completed board assembly fits snugly in a standard low-cost instrument case, with all input and output connectors along the rear.

A small DIP switch inside the unit lets you set up L'il Snooper for sequencing the signals from two, three or four cameras. The complete unit runs from a nominal 12V DC supply and draws less than 110mA, so it can easily be operated from a small plugpack or even a battery.

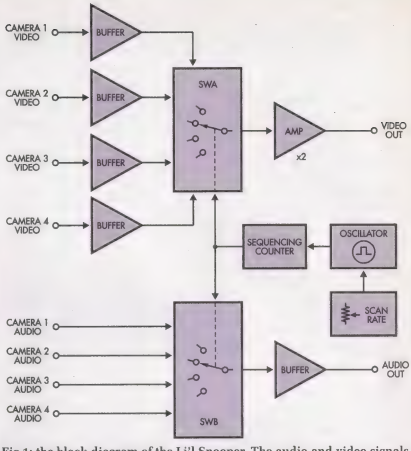

Fig.1: the block diagram of the Li'l Snooper. The audio and video signals are fed to multiplexing switches which are controlled by a sequencing counter. VR1 controls the oscillator to set the scan rate.

How it works

Fig.1 shows a simplified block diagram of the L'il Snooper. As you can see, it's really very straightforward.

Each of the camera video signals is terminated in the correct 75Ω resistance (to prevent cable reflections and ringing) and then fed to separate unity-gain buffer amplifiers. The buffer outputs are then fed to the inputs of multiplexing switch SWA which selects each one in sequence. From there, the selected signal is fed to another video amplifier stage, this time operating with a gain of 2 to compensate for the loss in the 75Ω "back terminating" resistor in series with the output.

The audio signals from the cameras are handled in a similar way but with less complication. Here, the inputs are taken directly via coupling capacitors to audio multiplexing switch SWB, with only a unity-gain buffer amplifier stage required between SWB and the audio output socket.

As you've probably guessed already, switches SWA and SWB are driven in tandem to perform the sequencing (or switching). In fact, they're both driven by a counter which is stepped by pulses from a low-frequency oscillator. The sequencing or "scanning" rate is adjusted by varying the oscillator's frequency.

So that's the basic idea of how L'il Snooper works. Now let's look at the full circuit, to fill in the details.

Circuit details

Although we showed the video and audio signals being selected by a pair of single-pole rotary switches in Fig.1, the actual circuit (Fig.2) does the same jobs using two groups of four SPST on-off switches. In addition, the switches are electronic rather than electromechanical and are based on two 74HC4066 quad bilateral switch ICs (IC2 & IC3).

Each pair of switches controls the video and audio from one of the camera inputs and we do the sequencing by turning on each pair of switches in turn. This is done by applying +5V to their gates, which are connected in parallel. Only one pair of switches is turned on at any time, so only one camera's audio and video (AV) signals are passed through.

All of the video inputs use an identical input buffer circuit based on an emitter follower stage. Transistor Q1 is the buffer for camera 1, Q2 for camera 2 and so on. The inputs are terminated in 75Ω resistors and are AC-coupled to the transistor bases to prevent damage or signal distortion due to excessive DC levels.

The 1MΩ resistors and diodes D4-D7 form simple clamp-type "DC restorer" circuits, setting the sync tip levels of all the video input channels to the same voltage level – ie, to +1.2V as established by forward-biased diodes D8 & D9. This makes sure that the video signals remain in the correct voltage range for correct operation of the bilateral switches. It also ensures that the signals all have the same black level so there's no undue "flashing" as the sequencer switches

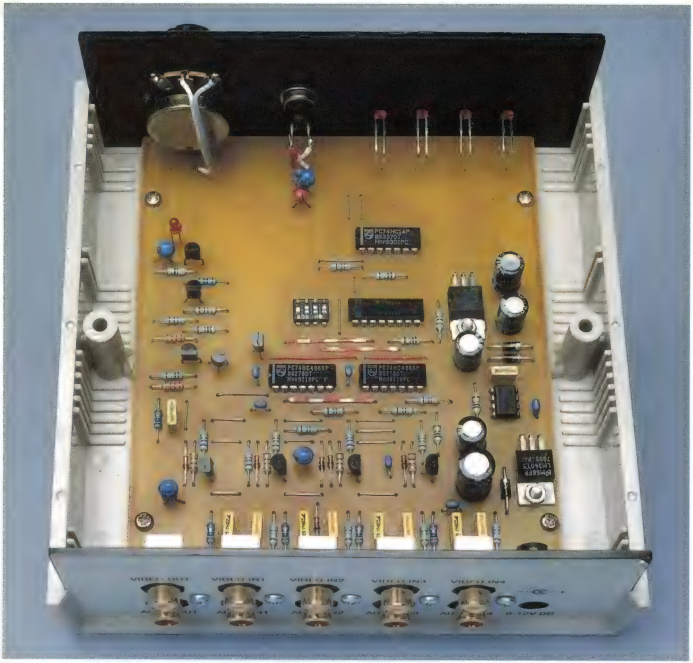

Everything apart from the scan rate pot (VR1) and the pause switch (S1) is mounted directly on the PC board, so the unit is easy to build. Check that all polarised parts are correctly orientated and make sure that you don't get any of the ICs or the voltage regulators mixed up.

from camera to camera.

The video signals on the emitters of Q1-Q4 are fed directly to video switches IC3a, IC3b, IC2a & IC2b. And as you can see, the outputs of these switches are all connected together, so whichever signal is selected is fed to the input of the video output buffer amplifier (Q6-Q9). As previously mentioned, this simple circuit operates with a gain of two and has a bandwidth of over 10MHz.

Transistors Q6 & Q7 form an input differential pair, with the output of Q6 fed to the base of output stage Q8. Transistor Q9 is used as an "active load" for Q8, presenting it with a low DC load but a relatively high AC load. This is done by connecting Q9 as a constant current sink, with LED5 providing a suitable reference voltage on its base.

Negative feedback is used to set the amplifier's gain to two and achieve the bandwidth we need. The feedback is provided by the two 470Ω resistors, which form a 2:1 voltage divider from the collector of Q8 back to the base of Q7.

Audio circuitry

The audio section is even simpler than the video section, as indicated in Fig.1. As shown, each input is connected to ground via a 470kΩ "bleed"

Fig.2 (facing page): the circuit uses 74HC4066 analog switches to switch the audio/video signals and these are sequenced using counter stage IC1. Transistors Q1-Q4 function as video input buffer stages, Q5 buffers the audio output signal and Q6-Q9 form a video output amplifier.

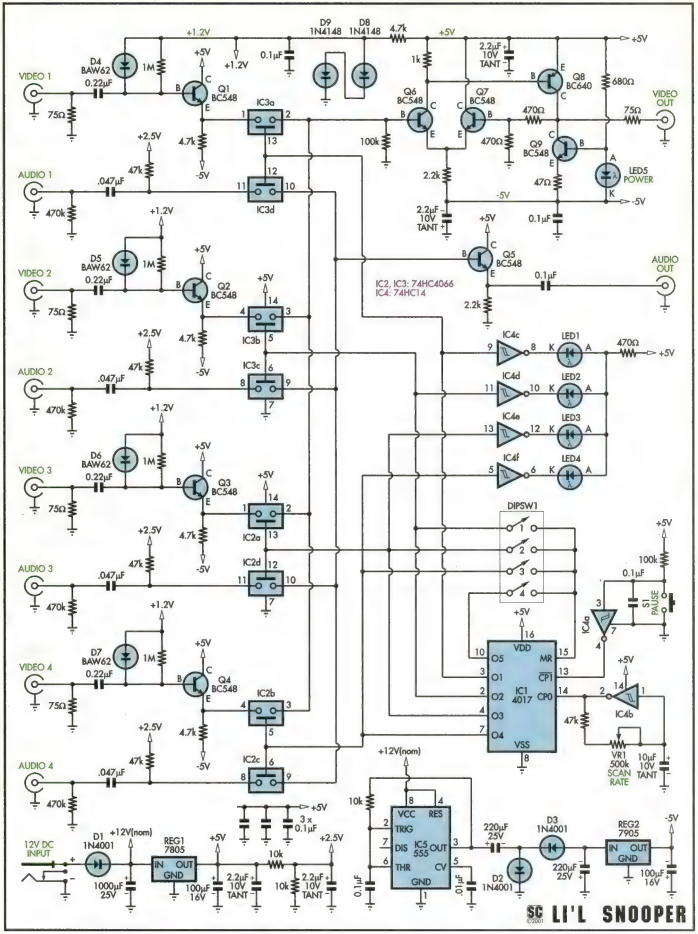
LI'L SNOOPER
VIDEO 1
AUDIO 1
VIDEO 2
AUDIO 2
VIDEO 3
AUDIO 3
VIDEO 4
AUDIO 4
VIDEO OUT
AUDIO OUT
12V DC INPUT
IC2, IC3: 74HC4066
IC4: 74HC14
DIPSW1
LED1
LED2
LED3
LED4
LED5 POWER
SCAN RATE
REG1 7805
REG2 7905
IC5 555
IC1 4017
D1 1N4001
D2 1N4001
D3 1N4001
D4 BAW62
D5 BAW62
D6 BAW62
D7 BAW62
D8 1N4148
D9 1N4148
Q1 BC548
Q2 BC548
Q3 BC548
Q4 BC548
Q5 BC548
Q6 BC548
Q7 BC548
Q8 BC640
Q9 BC548

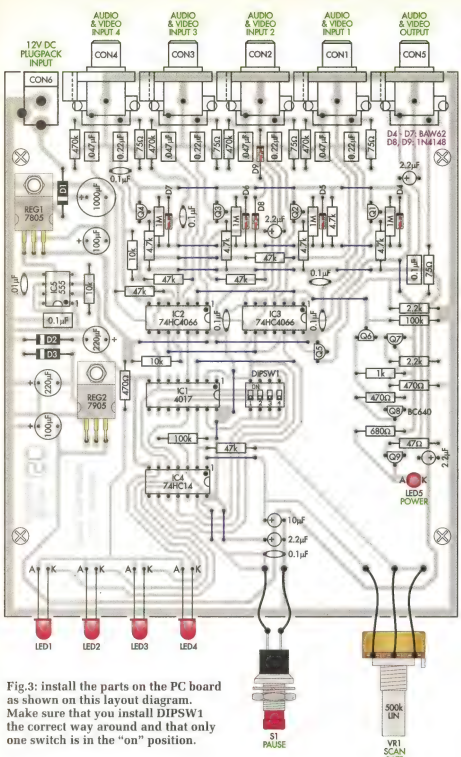

Fig.3: install the parts on the PC board as shown on this layout diagram. Make sure that you install DIPSW1 the correct way around and that only one switch is in the "on" position.

resistor and the audio signals fed via .047μF coupling capacitors to audio switches IC3d, IC3c, IC2d & IC2c.

The only extra complication here is that the switch side of each coupling capacitor is connected to a "half-supply" voltage of +2.5V via a 47kΩ isolating resistor. This half supply voltage is provided by two 10kΩ resistors connected between the +5V rail and ground.

This ensures that the audio signals remain in the optimum voltage range for the bilateral switches (for minimum distortion) and that they're at the same DC level to prevent switching clicks.

The outputs of the audio switches are connected together, so that whichever signal is selected passes directly to the base of output buffer transistor Q5. As you can see, this is simply an emitter follower, with the output taken from its emitter via a 0.1μF coupling capacitor.

Capacitor Codes

Value	IEC Code	EIA Code
0.22μF	224	220n
0.1μF	104	100n
.047μF	473	47n
.01μF	103	10n

Sequencing

Now let's see how the sequencing circuitry works.

The sequencing counter is formed by IC1, a 4017 Johnson-type decade counter whose first four outputs (O1-O4) are used to drive the four pairs of switches. We use simple feedback from these outputs back to the master reset (MR) input (pin 15) to force the counter to count by a smaller number than 10, to suit the number of cameras being used.

This feedback is controlled by switch DIPSW1, which is set to suit the number of cameras used. If there are four cameras, only the "4" switch is turned on (closed), which makes the counter reset each time the O5 output goes high. This turns the counter into a modulo-4 counter, so that all four pairs of analog switches are turned on repeatedly in sequence.

On the other hand, if you have only three cameras, the "3" switch of DIPSW1 is turned on instead of "4", so that the counter resets each time the O4 output goes high. This makes the counter operate in modulo-3 mode so that only the first three pairs of analog switches are turned on in sequence.

Similarly if you only have two cameras, the "2" switch of DIPSW1 is turned on to make the counter operate in modulo-2 mode. Only the first two pairs of analog switches are then turned on, in sequence – or alternately, if you prefer.

What happens if you turn on only the "1" switch of DIPSW1? That's right, the counter then resets whenever O2 goes high – so it effectively stops counting altogether, with the analog switches for camera 1 turned on continuously. Clearly, there's no point in doing this because L'il Snooper then doesn't do anything useful. But if you only have one camera you don't need

a sequencer, anyway!

I used a 4-pole DIP switch because you can't buy one with three poles.

LEDs 1-4 are used to indicate which camera input channel is selected at any time. As you can see, they are driven from the four switch-selecting outputs of IC1, via inverters IC4c-f. The LEDs can share a common 470Ω current-limiting resistor, as only one of these LEDs is ever turned on.

The low frequency oscillator which drives the counter is formed by Schmitt inverter IC4a, connected as a simple relaxation oscillator. The 500kΩ pot is connected as an adjustable feedback resistor, allowing the oscillator frequency to be varied over a range of about 10:1 (from roughly 0.3Hz to 3Hz).

The output of the oscillator is fed to one of the two count inputs of IC1, at pin 14. This allows the counter to operate whenever the other count input (pin 13) is held low. And it normally is held low by the output of inverter IC4b, whose input is pulled high via a 100kΩ resistor to +5V.

Counting can be paused very easily, simply by pressing the Pause push-button switch S1. This shorts pin 3 of IC4b to ground, forcing its output high and hence stopping the counter. Pressing the switch again resumes counting.

The 0.1µF capacitor across S1 provides the necessary decoupling to prevent miscounting due to contact bounce.

The RCA output sockets and the DC power socket are all mounted directly on the PC board, so there's very little internal wiring. Use insulated wire to prevent shorts between adjacent links near IC2 and IC3.

Power supply

The power supply part of L'il Snooper is very straightforward. As shown on Fig.2, the nominal +12V DC from an external source (eg, a plugpack) is fed in via polarity protection diode D1 and filtered using a 1000µF electrolytic capacitor. The filtered DC rail is then fed directly to 3-terminal regulator REG1 to produce the main regulated +5V rail.

In addition, the filtered 12V rail is used to power IC5, a standard 555 timer IC used here as a self-oscillating commutator switch. This drives a sim-

Resistor Colour Codes

❑	No.	Value	4-Band Code (1%)	5-Band Code (1%)
❑	4	1MΩ	brown black green brown	brown black black yellow brown
❑	4	470kΩ	yellow violet yellow brown	yellow violet black orange brown
❑	2	100kΩ	brown black yellow brown	brown black black orange brown
❑	5	47kΩ	yellow violet orange brown	yellow violet black red brown
❑	3	10kΩ	brown black orange brown	brown black black red brown
❑	5	4.7kΩ	yellow violet red brown	yellow violet black brown brown
❑	2	2.2kΩ	red red red brown	red red black brown brown
❑	1	1kΩ	brown black red brown	brown black black brown brown
❑	1	680Ω	blue grey brown brown	blue grey black black brown
❑	3	470Ω	yellow violet brown brown	yellow violet black black brown
❑	5	75Ω	violet green black brown	violet green black gold brown
❑	1	47Ω	yellow violet black brown	yellow violet black gold brown

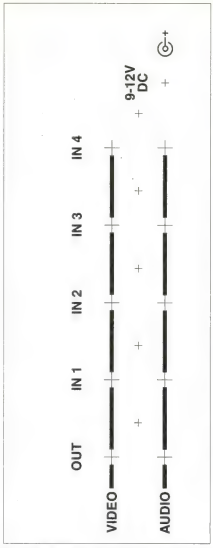

Figs.4&5: these full-size artworks can be used as drilling templates for the front and rear panels. Drill small pilot holes first, then carefully enlarge them to the correct size using a tapered reamer.

ple charge-pump voltage inverter using D2, D3 and two 220µF capacitors, to produce a -10V rail. This is fed to REG2 which produces a regulated -5V rail for the video amplifiers.

Putting it together

Apart from the 500kΩ pot and Pause pushbutton S1, all of the components used in L'il Snooper mount directly on a PC board coded 02106011 and measuring 120 x 144mm. The only off-board wiring you have to worry about is the four short wires which connect the pot and pushbutton switch to the front of the board.

The four indicating LEDs mount directly on the PC board but protrude through 3mm holes in the front panel. Similarly, the input and output connectors are also soldered directly to the PC board and are accessed via holes in the back panel.

Fig.3 shows the assembly details for the PC board. There are 22 wire links on the board and it's probably best that you fit these before anything else, to make sure you don't miss any. Most can be fitted using component lead offcuts or tinned copper wire but be sure to use insulated wire for the longer leads, particularly where they run close together (see photo).

After the links are in, fit the DC input socket and the double RCA connectors along the rear edge of the board, as these can be a bit fiddly. You may have to enlarge the holes in the board slightly to take the various pins, in each case. Note that each double RCA socket has a "barbed" plastic spigot on each side and these mate with 3mm holes in the PC board to help hold each socket in position.

With the sockets all fitted and their pins soldered underneath, the next step is to fit switch DIPSW1. Watch out here – it must be fitted with its "ON" side towards the rear of the board.

The rest of the components can now be installed. As usual, fit the low-profile resistors and diodes first, making sure each diode is orientated correctly. You can then fit the small non-polarised capacitors, followed by the TAG tantalums and the electrolytic capacitors – again watching their polarity.

Next can come the transistors. Note that there are eight BC548s and only one BC640 (Q8). You may want to fit the BC640 first to make sure it doesn't end up in the wrong spot.

The next step is to fit the two voltage regulators and the four ICs. Make sure you don't accidentally swap the regulators – the 7805 is REG1 and the 7905 is REG2. The leads of both are bent down by 90° 6mm from their bodies, so that their metal tabs can be bolted flat against the PC board.

Use 10mm-long M3 machine screws to secure them to the PC board before soldering their leads.

Watch the static!

The four dual-in-line (DIL) ICs are all CMOS devices, so take the usual precautions against static charge damage when you're fitting them to the board. Earth the soldering iron and yourself if possible and solder each chip's supply pins to their board pads before you solder the other pins. Be sure to fit each IC with the correct orientation, as shown in Fig.3.

All that should be left now to complete your board assembly is to fit the five LEDs. These are of course polarised, so make sure you fit them with their longer anode (A) leads to the left. LED5 is the easiest to fit, because it's simply mounted vertically on the board near Q9. You can leave about 8mm of lead length between the LED body and the top of the board.

The four "indicator" LEDs (LEDs1-4) should initially be mounted vertically also but with their leads left at full length. When they're all fitted, carefully bend each LED's leads forward by 90°, at a point about 11mm down from the bottom of the LED body. This isn't difficult to do if you use a pair of long-nose pliers to grip them just below the bend point. Your

The audio/video input and output sockets protrude through holes drilled in the rear panel of the case. Another hole, at bottom right, provides access to the DC power socket.

four LEDs should all end up pointing forwards in a neat row, ready to mate with the holes in the front panel.

There's one last step to finish the board assembly – you have to connect two short lengths (about 50mm) of insulated twin-lead hookup wire (eg, rainbow cable) for the rate pot and pause switch connections. Bare and tin about 5mm at both ends of all four wires before soldering them to the appropriate pads on the PC board.

Fitting it in the case

The board fits snugly inside a standard plastic instrument case measuring 160 x 155 x 65mm. However, before installing the board, you have to prepare the front and rear panels (note: some kits may come with these pre-punched).

In summary, you have to drill six holes in the front panel and 16 in the rear panel (each double RCA socket also attaches to the rear panel via a small self-tapping screw, for added support). The artwork for the two panels is reproduced here and photocopies of these can be used as templates for drilling the various holes. If you're building your own unit from scratch (rather than from a kit), you might also want to use a clean photocopy of each as a dress panel.

Don't try to drill large holes in one go, otherwise you'll end up making a mess. Instead, drill small pilot holes first, then carefully enlarge each hole to its correct size using a tapered reamer.

When your panels are finished, cut the pot shaft to length (to suit the knob), then mount the pot and push-button switch in position. The knob can then be fitted to the pot, after which you're ready for the final assembly. This is best done in a particular order, to make things easier.

First, slide the rear panel into its slot in the bottom of the case, then fit the board assembly so that the RCA connectors pass through their respective holes. Be sure to push the board all the way home so that the connector bodies sit flush against the inside of the rear panel.

At this point, the PC board's mounting holes should line up with the support pillars in the bottom of the case. Once everything is correct, secure the board with four small self-tapping screws, then fit the small self-tapping screws which secure the double RCA connector sockets to the rear panel (these go in from the outside).

Both the PC board and rear panel should then be securely attached to the bottom of the case.

The front panel assembly can now be slid down into its slot, gently easing it down in front of the four LEDs until they locate with the matching holes. Finally, the four connecting leads from the board can be soldered to the lugs of the pot and pushbutton

Parts List

1 PC board, code 02106011, 120 x 144mm
1 plastic instrument case, 160 x 155 x 65mm
5 dual RCA sockets, vertical PC-mount (CON1-5)
1 2.5mm PC-mount DC power connector (CON 6)
1 4-pole DIP switch (DIPSW1)
1 SPST push-on/push-off switch (S1)
1 small instrument knob
1 500kΩ linear pot (VR1)
2 10mm x M3 machine screws with M3 nuts
4 small self-tapping screws, 6mm long

Semiconductors
1 4017 CMOS counter (IC1)
2 74HC4066 analog switch ICs (IC2, IC3)
1 74HC14 hex Schmitt inverter (IC4)
1 LM555 timer (IC5)
1 7805 3-terminal regulator (REG1)
1 7905 3-terminal regulator (REG2)
8 BC548 NPN transistors (Q1-Q7, Q9)
1 BC640 PNP transistor (Q8)
5 red LEDs (LED1-5)
3 1N4001 diodes (D1-D3)
4 BAW62 diode (D4-D7)
2 1N4148 diode (D8,D9)

Capacitors
1 1000μF 16VW RB electrolytic
2 220μF 16VW RB electrolytic
2 100μF 10VW RB electrolytic
1 10μF 10VW TAG tantalum
4 2.2μF 10VW TAG tantalum
4 0.22μF MKT polyester
2 0.1μF MKT polyester
6 0.1μF monilithic ceramic
4 .047μF MKT polyester
1 .01μF MKT polyester

Resistors (0.25W, 1%)

4 1MΩ	2 2.2kΩ
4 470kΩ	1 1kΩ
2 100kΩ	1 680Ω
5 47kΩ	3 470Ω
3 10kΩ	5 75Ω
5 4.7kΩ	1 47Ω

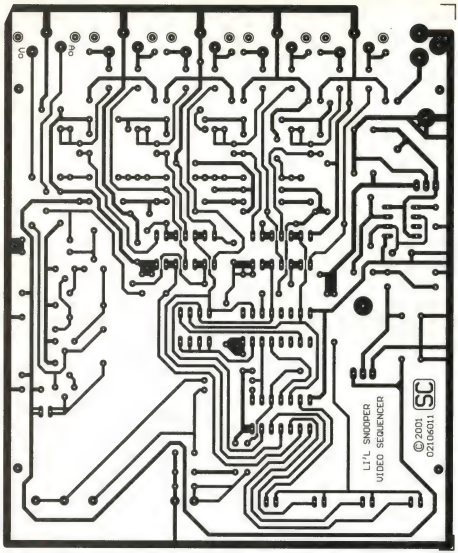

Fig.6: check your PC board for defects by comparing it with this full size etching pattern before installing any of the parts.

switch, to complete the wiring.

Your L'il Snooper is now ready for the smoke test.

Setting up

The first step in setting up is to decide how many cameras you're going to be using and set DIPSW1 accordingly. Only one of the "4", "3" or "2" switches should be pushed to the ON position – the others (including the "1" switch) should all be left off. The Scan Rate pot should initially be turned fully clockwise.

Now connect your plugpack or other source of 12V DC to the power socket, apply power and check LED5 (on the board, just behind the pot). It should be glowing steadily.

The LEDs on the front panel should be glowing in sequence, like a small light chaser. If so, try turning the pot anticlockwise – this should slow things down and if it does, your L'il Snooper is probably working correctly.

If LED5 isn't glowing and/or all of the other LEDs are off, disconnect the power immediately and check for problems. If all of the LEDs are off, you may have a problem in the power supply. Look for a diode or an electrolytic capacitor that's fitted the wrong way around. Check also that REG1 and REG2 haven't been swapped and check the wiring polarity to the 12V DC connector plug. These are the most likely causes of a "no-go" situation, apart from a hairline crack or short circuit in the PC board pattern.

If most of the LEDs glow (when it's their turn, in the case of those on the front panel) but one or two don't, odds are that you've fitted those particular LEDs the wrong way around.

The remaining possibility is that LED5 glows steadily and one of the others also glows steadily. This would suggest that the power supply is probably OK but the sequencing counter isn't counting for some reason. Possible causes of this are a short or hairline crack on the PC board in the vicinity of oscillator IC4a, pause inverter IC4b or near the counter itself (IC1). Alternatively, the 10µF tantalum capacitor may have been installed with reverse polarity.

Even if none of these problems is evident, it's a good idea to check the +5V and -5V supply rails with a DMM. They should both be within a few tens of millivolts of these figures. If so, you can fit the top of the case and screw it together – your L'il Snooper is now ready for business.

Putting it to work

Putting L'il Snooper to work is easy. Just plug each camera's video and audio outputs into the appropriate input sockets (starting with those for Camera 1) and connect L'il Snooper's outputs to the AV inputs of your video monitor or TV receiver. When it's powered up, you can adjust the scanning speed using the Scan Rate control and stop the scanning at any time by pressing and holding in the Pause button. It's as simple as that.

By the way, the picture on the monitor may roll for an instant as each camera is selected. That's because the cameras won't be locked together and the switching isn't locked to any of them either. However, most modern monitors and TV sets lock very quickly, so this shouldn't be a problem. You may have to find the best setting for the monitor's vertical hold control, though.

If you add extra cameras (up to a total of four) at any stage, you'll have to open up L'il Snooper's case again and adjust the DIP switch settings so it scans the right number of inputs.

Tweaking the scan rate

A final word: if you're not happy with the scanning rate range, this is easy to change. All you need to do is substitute a different value for the 10µF tantalum capacitor connected between pin 1 of IC4a and ground. A larger value (say 22µF or 33µF) will slow the scanning rate range down, while a smaller value (say 6.8µF or 4.7µF) will speed it up. **SC**

ABC Microcontrollers*? No Risk - Just RISC!

*AKA "Hot Chips" - available at all Dick Smith Electronics stores!

Investment Technologies' ABC Microcontroller Mini Board

Whether you are just starting out in the world of programming microcontrollers or need the power of the AVR. . . the ABC Mini Starter kit contains everything you need. Included in the Mini kit is:

- **Microcontroller Board**
- **Programming Cable**
- **Serial Cable**
- **Power supply cable for 9V battery**
- **ABCEdit Software**

Both Mini & Maxi boards feature the Atmel Advanced RISC AVR 8535 Processor

Investment Technologies' ABC Microcontroller Maxi Board

This is a more powerful solution for users experienced with microcontrollers. It's ideal for professionals as it provides a low-cost solution for many engineering tasks. Can be run as a stand-alone microcontroller. Included in this kit is:

- **Microcontroller Board**
- **Programming Cable**
- **Serial Cable**
- **ABCEdit Software**

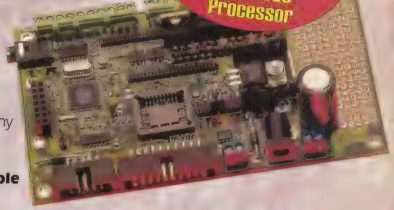

Ask for your FREE spec sheets - or visit our website!

LOOKING FOR A CONTRACT DESIGN FACILITY? CALL US!

Investment Technologies has a proven track record and we are ready, willing and able to put our expertise to work for you! Just some of the things we do ... extremely well ...

- Custom electronic engineering
- Chip level software
- Custom software - Windows (3.11/NT/95/98/2000) & DOS
- Tailored GPS solutions and tracking
- And much more!

Phone: (02) 4577 4893 Fax: (02) 4587 8119

email: invtech@hawknet.com.au web: www.hawknet.com.au/~invtech

PC GPT

When you plug a game controller or joystick into the games port on your PC and fire away, something should happen! But if it doesn't, what's to blame: the games port, the games controller/joystick or perhaps even the software? This simple Games Port Tester will at least tell you whether the port itself is OK. It's simple to make, simple to use and will cost next-to-nothing to build.

Design by Trent Jackson

This Games Port Tester, or GPT, is arguably the simplest possible way to check to see if the games port is functioning correctly.

Initially, the project was created to test and experiment with the quality and accuracy of the games ports on various low-cost sound cards. But it is just as happy testing the games ports which are fitted to most PCs.

It will test both sides of the port – Player 1's "X" and "Y" axes and fire buttons and similarly Player 2's "X" and "Y" axes and fire buttons. This is accomplished by simply flicking a switch.

The software written to suit this project features an auto calibration control and toggle control between both players, along with smooth, sprite-free graphic movement on the 100K and 200K systems.

What's in a games port?

The games port is more or less just a resistance-measuring device.

Normally, a joystick is connected to

the games port. Inside the joystick are two potentiometers, or variable resistors, which adjust as the joystick is moved. One pot is assigned to the X (horizontal) axis and the other to the Y (vertical) axis.

Change the resistance in the X-axis (by moving the joystick back and forth) and the cursor (if there is one) moves across the screen. Change it in the Y-axis and the cursor moves up and down the screen.

Change both at the same time and the cursor moves at an angle across the screen.

The games port interprets the X- and Y-axis movement, the speed and the distance. It then feeds this information to the software being used at the time and the software makes use of this information as it requires.

The other part of the joystick is the "fire" button which, as you have probably guessed, simply closes a switch. Again, the games port detects this and causes an action within the software running at the time (not surprisingly, usually some sort of weapon firing!).

The GPT

Because a games port is such a simple device, a games port tester can also be very simple.

All you need are two variable resistors to check the X- and Y-axes and a pair of push-button (momentary action) switches to check the firing.

In addition, we include a DPDT, centre-off switch which is used to toggle between Player 1 input and Player 2 inputs.

So as you can see the GPT is a very simple device, at least hardware-wise. The software is a slightly different story. It has to be able to detect the varying resistances in each axis as well as the push-button positions.

Let's assume that the variable resistor which controls the X-axis is rotated clockwise. This will cause the resistance value being seen by the games port to increase, thus causing the software to move the circle on the grid to the right, in proportion to the to the initial value of the resistance.

Now if that same resistor is rotated anti-clockwise, the resistance value being returned to the port will decrease.

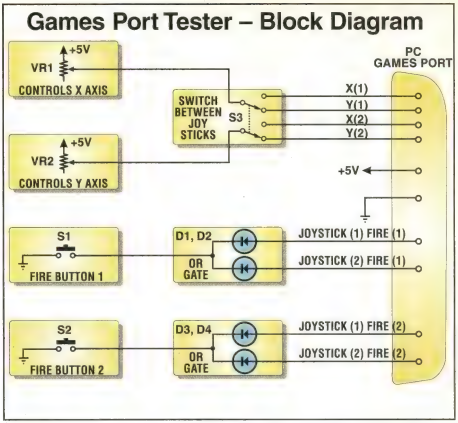

Thus the circle on the grid will move to the left, again in proportion to the initial value.

The same applies to the Y-axis, except that movement will occur in the vertical direction – up and down the screen, as the resistance is increased and decreased.

Testing the games port then involves comparing the X and Y-axes values that

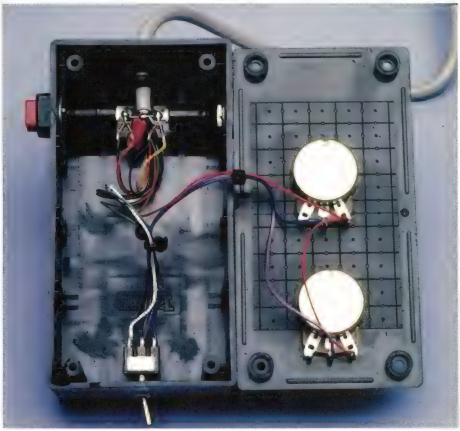

A look inside the Games Port Tester. All wiring is point-to-point; that is, no PC board or other support is required.

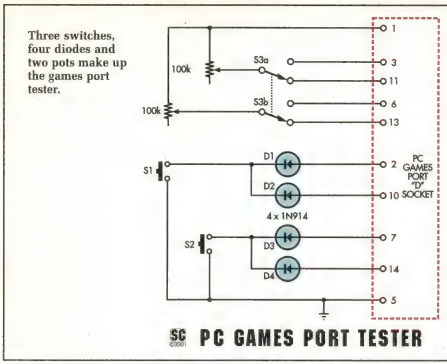

the software prints on the screen and checking to see how stable the circle graphic is in movement by rotating the X and Y knobs on the GPT.

The value shown on the screen is directly proportional to the value of resistance, within a tolerance of about 10%.

Construction

All wiring is point-to-point due to the minimal number of components involved. Start by drilling the holes in the jiffy box for the two pots and three switches. The pots mount on the lid of the box, the two pushbuttons on each side and the toggle (changeover) switch on the end.

At the opposite end of the box you'll need a 10mm hole for the 2m long, 9-conductor cable which connects to the D-15 plug. It's a good idea to strip this cable and fit it before fitting anything else, as everything basically wires to this cable. Strip off around 200mm of outer insulation and fit a cable tie to the cable at the point it exits the box to make it captive. A grommet fitted to the cable prevents wear and tear.

If you don't have a short length of red wire to connect the two "hot" ends of the pots together, you might have to strip off, say, another 60mm and sacrifice the other colours.

By the way, when we say 9-conductor cable there are actually ten conductors, one being the braid or shield (earth). 9-conductor shielded cable may not be all that easy to obtain – Altronics have it (Cat W-2712), as do Jaycar (Cat WB-1578). But if you have to, you could use 12-core and ignore three.

If you use similar-sized push buttons to those used in the prototype you will find that they nearly touch when fitted. This makes them a handy mounting point for the four diodes, which connect between the switches and the D-15 wiring, in all cases with the cathodes (striped end) towards the switches. The anode ends solder direct to the wires with nothing else to support them.

A link connects one pole of each pushbutton switch, with the shield of the cable (earth) also connected to this link. If there is any danger of the shield shorting to another wire or component, fit a short length of insulation over it first. The same comments apply at the other end of the cable (ie, at the D-15 plug).

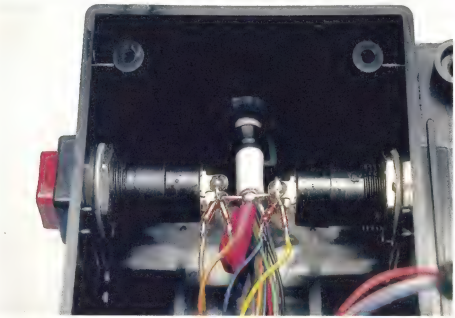

A close-up of the "business end" of the tester, showing the four diodes soldered directly to the pushbutton switches and the wiring back to the D-15 plug soldered to these. The big red thing is a piece of insulation over the cable braid.

Parts List – Games Port Tester

- 1 Jiffy box, 68 x 130 x 43mm
- 1 label to suit
- 2 SPST momentary-action (push on) push button switches
- 1 DPDT centre off miniature toggle switch
- 2 metres 9-core shielded cable
- 1 D-15 male connector
- 1 D-15 backshell
- 2 large knobs (25 to 30mm diameter) with flat surfaces
- 2 knob labels, "X" and "Y"
- 1 grommet
- 3 small cable clamps
- 2 10mm lengths spaghetti insulation or heatshrink tubing

Semiconductors

- 4 1N914 small signal silicon diodes

Resistors

- 2 100kΩ linear potentiometers

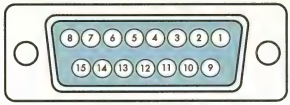

D-15 CONNECTOR (REAR VIEW)

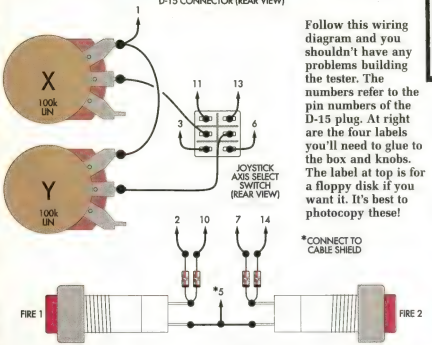

Follow this wiring diagram and you shouldn't have any problems building the tester. The numbers refer to the pin numbers of the D-15 plug. At right are the four labels you'll need to glue to the box and knobs. The label at top is for a floppy disk if you want it. It's best to photocopy these!

Using the wiring diagram as a guide, solder the various components and wires in place. Cut the various wires to appropriate lengths and bare only the last 5mm or so to minimise the likelihood of shorts. Be especially careful around the changeover switch.

A couple of cable ties can hold the various conductors together and make for a neater job.

After checking that your wiring is OK, fit the lid to the box and glue the label in place. It covers over the screw holes - hopefully you won't have to open the box up again. By the way, we use 3M "repositional spray adhesive" to fix paper labels to boxes. Fit the large knobs and the internal assembly is complete.

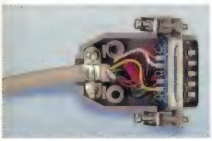

Here's the almost-assembled D-15 plug. All that remains is to fit the top cover and screw the two halves together. The cable clamp is the metal fitting immediately before the cable exits the backshell. Also note the insulation (heatshrink) fitted to the earth braid.

The D-15 plug

If we said be careful soldering to the changeover switch, be doubly careful with the D-15 plug. There is very little space between the pins and it's easy to have one strand of copper bridge out two pins. This will not only stop your GPT working; it could actually damage your computer. And you wouldn't want that, would you!

Again, follow the wiring diagram very carefully to ensure that you have the right colour wire going to the right colour pin. As we mentioned before, you should slip a length of insulation over the earth braid to make sure it cannot short to other pins.

When you have completed wiring the plug - and double checked that you haven't any shorted pins - it's time to assemble it into its "backshell". First of all, fit the cable

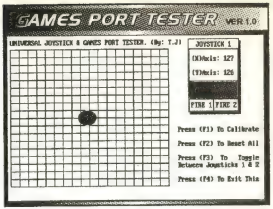

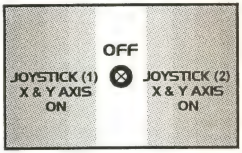

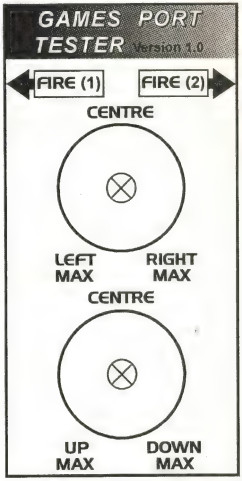

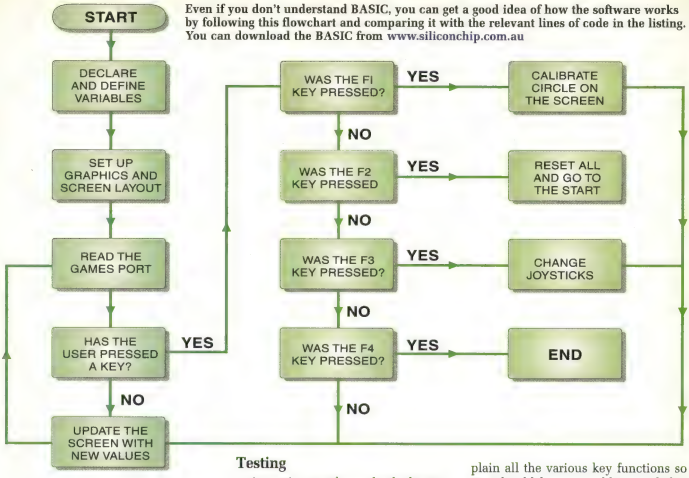

Even if you don't understand BASIC, you can get a good idea of how the software works by following this flowchart and comparing it with the relevant lines of code in the listing. You can download the BASIC from www.siliconchip.com.au

clamp as shown in the photograph - it does nothing except provide strain relief for the cable.

Then drop the plug into one half of the backshell, pushing it down into its position so that the lip on the front of the backshell holds it in place. The strain-relief clamp you fitted before occupies a place near where the cable emerges from the shell.

There are two "captive" screws which are used to hold the plug in the PC socket. These are sometimes a pain to fit because one wants to fall out as you fit the other one! The trick is to fit the other half of the backshell, then open each side up again just slightly while you push the screws through into place.

You will note that each half of the backshell is identical with a round hole and a hex hole. This means that one of the backshell securing screws goes in from one side, with its hex nut on the other side, and the other screw goes the opposite way around. Actually that hex hole is handy because it holds the nut without pliers or a nut driver - all you need is a screwdriver.

Testing

Assuming you have checked everything twice, plug the GPT into the games port on the computer and turn your computer on. Of course, you'll need to run the software (joytest1.exe). When you do, you should see a red circle somewhere on a green grid.

Now you need to calibrate the software to your hardware by centring the circle to the cross on the grid. Adjust the two pots to the centre position, then press any key to finish the calibration process.

With proper calibration, the red circle should be very close to the centre cross on the grid. If not, repeat the calibration.

Now assuming that all is well, you should be able to rotate the X and Y knobs and be presented with a moving circle across the grid, in proportion to the movement of the knobs. If the games port is operational you should be able to move the circle to all four corners of the grid by combining the X and Y coordinates. On-screen instructions explain all the various key functions so use should be reasonably straightforward.

The software

The software is written in BASIC language and, as such, it is quite easy to follow. To assist you further, most of the lines have remarks to explain their function. Both the source code (.BAS) and executable (.exe) files can be downloaded from the SILICON CHIP website (www.siliconchip.com.au),

As well as checking out the games port, reading through the BASIC file is an excellent way to learn a little about the BASIC language and how to move graphics in the BASIC language with minimal flicker and without the need to create and use sprite graphics. It's also an great way to learn more about the various features and functionality of the games port on your PC, a port which often gets little use and is even less understood.

Who knows, you could develop an even better way to use it! **SC**

To learn more about PC Games Ports, refer to the series of articles "Experiment with Games Ports" published in SILICON CHIP between January 1992 and November 1994 (not in every issue!). Most of 1992 issues are now sold out but reprints can be supplied. Refer to the index pages of the SILICON CHIP website for months of appearance.

SILICON CHIP

www.siliconchip.com.au

Order Form/Tax Invoice

Silicon Chip Publications Pty Ltd
ABN 49 003 205 490

YOUR DETAILS

Your Name_____
(PLEASE PRINT)

Organisation (if applicable)_____

Address_____

_____

Postcode_____ **Daytime Phone No. (** **)**_____

Email address (if applicable)_____

Method of Payment:

❑ **Cheque/Money Order** ❑ **Bankcard** ❑ **Visa Card** ❑ **Master Card**

Card No. | | | | | | | | | | | | | | | | |

Card expiry date | | | |

Signature_____

PRICE GUIDE- Subscriptions

(all subscription prices INCLUDE P&P and GST)

Please state month to start.

Australia: 1 yr	$A69.50	2 yrs	$A135
1 yr + binder	$A83	2 yrs + 2 binders	$A159
NZ (air): 1 yr	$A77	2 yrs	$A145
Overseas (air): 1 yr	$A125	2 yrs	$A250

PRICE GUIDE- Other products

(all prices INCLUDE GST)

***BACK ISSUES in stock: 10% discount for 10 or more issues.** Australia: $A7.70 ea (including p&p by return mail) Overseas: $A10 ea (inc p&p by air).

***BINDERS: BUY 5 or more and get them postage free.** (Available in Aust. only) ..... $A12.95 ea (+$5.50p&p).

***SOFTWARE:** $7.70 per item (project) plus $3.30 p&p per order within Australia, $5.50 p&p per order elsewhere. (Most software is available free on www.siliconchip.com.au)

***ZOOM EFI TECH SPECIAL** $A8.95 inc p&p Aust; $11.95 inc p&p elsewhere

***COMPUTER OMNIBUS**: $A12.50 inc p&p Australia; NZ/Asia/Pacific $A15.95 inc p&p (air); elsewhere $18.95 inc p&p (air).

***ELECTRONICS TESTBENCH**: Aust. $A13.20; NZ/Asia/Pacific $A15.95 inc p&p (air); Elsewhere $18.95. (All prices incl. p&p).

***SILICON CHIP/JAYCAR WALLCHART:**
Unfolded (in mailing tube): $A9.95 including p&p (Australia only) – unfolded version not available elsewhere.
Folded: $A5.95 inc p&p within Australia; elsewhere $A10 inc p&p

***BOOKSHOP TITLES:** Please refer to current issue of SILICON CHIP for currently available titles and prices as these may vary from month to month.

SUBSCRIBERS QUALIFY FOR 10% DISCOUNT ON ALL *SILICON CHIP* PRODUCTS AND SERVICES#
#except subscriptions/renewals and Internet access

Qty	Item Description	Item Price	P&P if extra	Total Price
Total				$A

Special Offer! SUBSCRIBE & GET COMPUTER OMNIBUS FOR FREE! Australia Only!

TO PLACE YOUR ORDER

Phone (02) 9979 5644
9am-5pm Mon-Fri
Please have your credit card details ready

OR

Fax this form to (02) 9979 6503
with your credit card details
24 hours 7 days a week

OR

Mail this form, with your cheque/money order, to:
Silicon Chip Publications Pty Ltd,
PO Box 139, Collaroy, NSW,
Australia 2097

* Special offer applies while stocks last.

05-01

ALTRONICS overnight delivery

Take a look at our great mid-year specials! Don't hesitate to take advantage of these fantastic offers. You may wish to order via our "Virtual Store" at www.altronics.com.au which offers these specials and more 24 hours a day! To free up our busy phone lines we've decided to offer customers a FREE credit card calculator (Valued at $10.45) with all purchases over $100 made via the internet site!

Jack O'Donnell, Managing Director

Did you miss out ?

Our 18th edition 2000 - 2001 catalogue in our opinion is the the best & most informative ever produced by the industry. Just ask the customers who have already used it!

To get your FREE copy either e-mail us at: catalogue@altronics.com.au,
or phone us on 1800 999 007.
Priority will be given to e-mail requests.

Intelligent Programmable Remote Control

SAVE OVER 20%

Very simple to program and operate. Replaces up to ten remote controls plus adds up to 10 one-touch macro functions for armchair comfort.

Features: • Auto power save • Useable with all modern AV equipment (e.g. DVD) • Slide cover for sensitive buttons • Light sensitive Backlit display • Smart and easy to programm • Programmable LCD display titles

From this... ... *...to this!*

A 1002 RRP $130 **$99**

Brymen® Multi-Function DMM

The Brymen® Q 1080 digital multimeter is truly an amazing piece of test equipment with features only found in meters 2 or 3 times the price!

Features: Auto ranging • EF Detect • Data Hold • Temperature • AC/DC Voltage 250mV–750V • AC/DC Current 250µA–10A • Resistance 250Ω–25MΩ • Diode Check & Buzzer • Optically Isolated RS232 Interface (Q 1082)

Q 1080 RRP $449 **$129**

FREE! Software

Every Q 1080 purchased includes a FREE Q 1082 Optically Isolated RS232 Interface + Software to turn your meter into a fully fledged data logger (Valued at $26.25)

Black & White CCD cameras

Ideal for monitoring areas around your house such as your garage, pool or nursery. Available in PCB mount or housed in a metal case. *Features:* • *Simple to install & operate* • *Unobtrusive & if discreetly installed undetectable* • *Inbuilt mini microphone* • *Suitable for direct connection to a monitor or video input on a VCR*

S 9005 Metal Case with Audio RRP $125 **$99**

S 9010 PCB Mount RRP $119 **$60**

M 9420 Plugpack RRP $31.95

THIS MONTH FREE PLUGPACK to suit valued at $14.85 (M 9236) with every S 9005 purchased!

12VDC-240VAC 1300W Inverter

MASSIVE 4000W SURGE CAPACITY!!

The huge surge rating of this beast of an inverter means it's ideal for coping with the startup surge of fridges, freezers, pumps, grinders and microwaves. The unit will even power fluorescent lighting! The rugged, powder coated steel cabinet has lugs for wall mounting. It has a "no load shutdown" feature that powers down the inverter when no load is applied. This minimises the standby current draw from your batteries.

The M 8141 Remote Control can turn the inverter on and off from up to 50 metres away (10 metres of cable is included with the remote)

M 8142 ONLY **$899**

This month only, receive a **FREE** remote control with every M 8142 bought! **SAVE $129**

ALCADX 5 Sector Alarm Panel

Save a whopping $140!

Utilising the latest in Israeli military technology to bring you one of the most advance alarms on the market

Features: Authority approved programmable auto-dialler with up to 4 different numbers • Compatible with most security company monitoring systems • Auto-arming function • Up to 8 user & installer codes • Steel main cabinet • 24 hour zones & dedicated fire alarm sector • Discrete entry delay times for two different sector groupings • Alarm sensor & tamper loop on a single pair of wires • Unique siren tones for 24 hour & panic zones, normal alarm & fire alarm • Supplied complete with plugpack See catalogue for more details (Page 66)

SPECIAL OFFER - With each S 5105 sold receive a free S 5110 control panel Time stamped event log • 7 segment zone display reports alarm status and event log • Simple 4 wire connection. • Individual bypass of zone or group of zones. • LED indicators for Alarm Triggered, Fire, Zone Shunt and Armed Status • Key press beeper (selectable). • Backlit keypad with auto-shut off

S 5105 ONLY **$285**

20M CCD Camera Lead

20M lead for connecting CCD cameras. 2 x RCA male, 1 x DC Socket TO 2 x RCA male, 1 x DC Plug

P 6710 ONLY **$30**

Crossover Switch Box

Switch position 1 routes socket 'A' to socket 'a' and socket 'B' to socket 'b'. Switch position 2 routes socket 'A' to socket 'b' and socket 'B' to socket 'a'. All connections are female DB25.

D 1565 RRP $24.10 **$14**

Wireless Colour AV sender

Transmits and receives a colour video and stereo audio signal up to 50m. Transmit a video signal to another television or simply use one of these to make your security camera cable free.

Features:
- Includes transmitter, receiver and power supplies
- Standard RCA connections
- Compact transmitter unit
- Compatible with any video signal , i.e. Laser disc, VCR, CCD, Cable TV.
- Stereo audio
- Clear signal anywhere up to 50m (Line of sight)

S 9350 RRP $249 **$199**

Strobe/Siren

A water proof 100dB siren with built in blue strobe

S 5418 RRP $30.40 **$19.95**

4 Core

4 core security cable for use in alarm installations

W 2346 RRP $50 **$30**

NESS PIR Detector

The "Eye Spy" PIR detector is an ultra reliable, high quality sensor suitable for use with the Avgad alarm systems.

Features: • Operates with LED on or off • Adjustable pulse count • Opaque filter to reduce false triggering • Temperature compensation to further reduce false triggering • Wide angle (110°) lens • Vertical & horizontal beam adjustment • Normally Closed operation • Easy fit swivel bracket • Operates from 9-16VDC

S 5305 RRP $49.95 **$29**

Iroda Gas Irons

100W Handyman Iron

Features a "one-touch" piezo ignition for super-easy starting, and a thumb-wheel heat control. An absolute MUST for installers, mobile technicians, on-site service personnel, etc.

Supplied complete with soldering tip and bonus blow torch attachment.

T 2598 RRP $70.95 **$55**

12 Month No-risk Replacement Warranty!

50W Pocket Iron

F 2595 RRP $39.50 **$29.95**

Ideal for those one off small solder jobs away from the work bench. No need to run out a mains extension lead to fire up your normal soldering iron Features :- • Up to 50W of power • Up to 1 hours use per fill of butane • Compact, portable and easy to use

This month's RED HOT SPECIAL
Buy a T 2595 or T 2598 & receive a can of butane gas and a mini screwdriver absolutely FREE! Valued at $14.75. Hurry, limited to the first 50 orders!

Black & White Quad Video Processer

Perfect for home or shop surveillance systems

Enables you to take 4 CCD camera inputs and display all of them on a split screen format. The unit can also flick between the 4 inputs sequentially at full screen. Monitor all corners of your premises at once!

S 9300 RRP $599 **$359**

Features: • Accepts up to 4 CCD camera inputs • Operates as a standard switcher • 75Ω BNC Video outs for both display and recording • Built-in real time clock "timestamps" the footage • Requires 18V DC 500mA plugpack. (Part No. M 9357)

on-line ordering: www.altronics.com.au • fax order line (08) 9328 3487

1-800 999 007 Perth (08) 9328 1599

12 months minimum warranty

ALTRONICS

Ni-MH AA/AAA Battery Charger

Famous GP brand charger + AA batteries. Good for up to 1000 recharges.

Features: • Fits into a standard general purpose outlet • Safety cover prevents accidental touch during charging • Charges 2 or 4 batteries at a time • LED charging indicators • Suitable for AAA or AA NimH batteries • 4 x AA batteries included

FREE!! 4 x AA batteries

A 0292 RRP $59 **$49**

Uninterruptible Power Supplies (UPS)

12 Month warranty!

Professional uninterruptible power supplies will guard your computer from damage caused by power failure. Supplied complete with monitoring software and cables to ensure your computer is carefully shutdown without data loss. 300VA will suit an average Pentium PC.

Please Note: These units were used by the Sydney Olympics although you can hardly tell!

D 0650 ONLY! **$149**

Test Equipment Clearance!

30 Range Digital Multimeter

- **Temperature -50°C to 1100°C**
- **Data Hold**
- **Auto Power Off**
- AC Volts < 200mV - 750V
- DC Volts < 200mV - 1000V
- Resistance < 200Ω - 20MΩ
- Continuity Buzzer
- AC/DC Current < 200µA - 10A
- Diode Check
- Includes high quality test leads and shock-proof rubber holster!

Q 1102 RRP $109 **$54**

32 Range DMM with Frequency Meter

All the usual functions of a multimeter plus a frequency meter this unit is ideal for technicians or trades person's tool kit

Features: • Transistor tester • Capacitance up to 20µF • Resistance up to 200MΩ • Continuity/diode test • Temperature measurement • A massive 20A DC current range • Frequency counter up to 20kHz • Includes thermocouple temp probe,rubber holster with bench stand and UL approved test leads

SUPER LARGE DISPLAY!

Q 1006 RRP $89 **$69**

Automotive Alarm System

Why pay a security company to install an alarm when you can do it yourself and save a fortune ?

Super loud attention getting siren!

Features: • Easy to install • Multi-function remote • Starter immobiliser • Valet mode • Selectable auto arming. • LED Status indicator and a myriad of user programmable options • Interfaces with most central locking kits • Supplied with all cables and two keychain remotes • Code hopping • Super loud 110dB siren • Remote panic function • Approximately 30m range

S 5202 RRP $149 **$129**

5 Input Stereo MIXER

A super-compact stereo mixer designed with the DJ in mind

Features: • One mic & two music source inputs • Music source inputs are switchable between line or phono levels • Crossfader, cue volume & pre-fade listen slider controls • LED level meters • Includes 12VAC plugpack

A 2545 ONLY! **$79.95**

9 Input Stereo MIXER

A feature packed DJ mixer with XLR mic input and "talkover" switch

Features: • 5 channels with 9 inputs (4 inputs selectable between 2 input types) • Up to 4 Mic, 4 Line and 1 CD input • Twin VU level output displays • 3 band equaliser • Twin stereo outputs for power amplifier and tape deck • Assignable headphone monitor & volume • Talkover and balanced input on DJ Mic

A 2551 RRP $279 **$245**

Bonus Buy ! Purchase the A 2545 DJ mixer this month and receive a C 0383 microphone valued at $52.50 FREE! to the first 20 callers

8 IN 1 Remote Control

This pre-programmed remote control is extremely easy to use. It can replace up to 8 controls and can operate the following items - TV, VCR, VCD, DVD, LD,CD, Tape, Amplifiers, Cable Set Top Boxes & some air conditioners. Compatible with over 400 brands!

A 1007 RRP $35 **$24.95** NEW

Car Audio Subwoofers

Not only do these sound sensational, they look sexy too!! Mirror finish polypropylene cones will not flex or distort under high power use. They are specially designed for small sealed or vented enclosures.

C 3048 120W RMS RRP $105 **$70**

FREE! PURCHASE ONE OF THESE AMAZING SUBWOOFERS & receive a professional style speaker grill & clips, absolutely free. That's a total saving of $45.40 !

300W Car Audio Amplifier

A perfect dedicated subwoofer amplifier!

Superb performance & exceptional clarity makes this unit ideal as a dedicated subwoofer amp or as the beginnings of a thumping car stereo

Features:- 2 x 80W RMS into 4 ohms • 80Hz / 120Hz low pass active crossover • Bass & treble controls • Low power speaker level inputs or line level inputs • Stable into 2 ohms • Class "D" MOSFET power stage • Stylish low profile chassis • Gold plated connectors

C 9240 RRP $299 **$189**

Pro Soldering Station

FREE!

Features: • Precise temperature control • LED Temperature Setting Display • Superior ceramic heating element • Zero-volt switching • Light weight ergonomic mini handle • Cleaning sponge tray incorporated in base • Temperature range 200 - 500°C • Temperature setting lock facility • Iron stand can be mounted either side • 4mm earthing point for anti-static strap

T 2438 ONLY! **$250**

"We have been using the T 2438 for 10 hours per day for the last 12 months. Our technicians are impressed with the quick heat up time, accuracy of the temperature display and ease of use."

FREE! SOLDERPRO 70

*Purchase the T 2438 Professional Soldering Station above, **mention this ad** and we will throw in this T 2580 70W Go Anywhere Gas Iron, T 2439 solder roll holder AND a roll of solder (T 1110) valued at over $72 absolutely * **FREE!***

Pocket Blow Torch

Powered by a refillable gas lighter (supplied), this unique blow torch burns at 1300°C, making it ideal for many types of brazing and heavy duty soldering. It has an in-built piezo electronic ignition system which ensures easy lighting every time

BONUS FREE HEATSHRINK! Buy the T 1480 and receive a RONAL W 0880 Hobby Heatshrink Pack Valued at $15.75 for free! (Limited Stock Only)

T 2490 ONLY! **$29**

A power supply for Life!

Ideal for use in research labs or service departments

M 8210 RRP $442 **$335**

A lab supply with a main output rail adjustable from 0 - 18V, at up to a huge 10A.

Features:- Separate controls for voltage and current limiting • Fixed 12V and 5V output rails, at up to 0.5A • Precision digital LCD voltage & current meters for fine adjustment

6 x 9" 4 Way Shelf Speakers

Featuring an infinite baffle bass driver & low profile making these speakers ideal for shelf installations

Features: • 250W max power , 88W RMS• 4 ohms impedance.• Infinite baffle optimised bass driver • 16Hz - 18KHz Freq. response

C 9365 RRP $99 **$79**

Buy both the C 9240 car amp and C 9365 shelf speakers for just *$219* *that's a saving of $89!*

on-line ordering www.altronics.com.au • fax order line (08) 9328 3487

Perth (08) 9328 1599 1-800 999 007

ALTRONICS

overnight delivery

UHF Remote Control Switch

This little gadget can easily be used to create a very simple panic alarm, remote lighting control or remote garage door control

Features:
- Latching/Non-latching Contacts
- 2 Relay & 1 Transistor Outputs
- Code Hopping - Audible confirmation
- Incorporates handy key ring
- 387 billion combinations
- 30m operating range (open area)
- 24 V DC 1 Amp contacts

This month save over 40%

A 1016 WAS $115.50 **$69**

Auto Ranging DMM

Autoranging multimeters are great if you don't have a free hand to change ranges on your DMM. Ideal for service persons or hobbyists

Features
- **Manual override of auto-ranging**
- **Range hold & data hold • Auto power off • °C Temperature range • AC < 400mV to 600V • DC Volts < 400mV to 600V**
- **Resistance < 400Ω - 40MΩ • Continuity buzzer • AC/DC current < 400µA - 10A**
- **Transistor tester • Diode check**
- **Rubber holster included**

Includes K-Type Temperature Probe

Q 1132 ONLY **$59**

Infra-Red

Install this IR mouse and be free of tangled leads!

Features: • Cable free • Simple to install • Compact IR receiver • 2 Scroll wheels (Up/Down & Left/Right) • Wide (160°) operating angle • Selectable third button control • Automatic battery save mode • Complete with driver software • Microsoft Windows® 3.1/NT/95/98 compatible • Powered from AA batteries

D 2055 RRP $49.95 **$35**

LAN Cable Tester

The quick & easy way to test field wiring. Simple operation will save you hours of frustrating fault finding.

Features: • Auto/Manual mode • LED indicators for all connections including ground • Will test 10Base-T, 10Base-2, RJ45/11, 258A, TIA 568A/568B & token Ring • BNC to RJ45 Adaptor lead included • RJ45 to RJ45 Adaptor lead included • Includes Soft carry case

Save time and money - find faults in LAN cables quickly and easily.

D 3007 RRP $129 **$89**

Flameless Heat Gun

NEW

Featuring a whopping 1400°F output!

T 2479 ONLY **$89**

Features: Easy one hand piezo ignition & temperature control • Uses standard butane gas • Includes safety stand • Wide nozzle long life catalyst allows infinite adjustable heat setting • Up to 120 min. operation without a refill (mid setting) • Includes spare gas filter

BONUS FREE HEATSHRINK!
Buy the T 2479 and receive a SONUS W 0880 Hobby Heatshrink Pack Valued at $15.75 as my extra charge!

Ultrasonic Cleaner

Rejuvenate your jewellery or clean your pen nibs, fuel injectors, glasses, watches PCB's, computer connectors, switches or relays.

Features: •170x 90 x 55mm stainless steel tank •Capacity of 600mls.•Cleans without scratching delicate jewellery or glass •Uses water & household detergent

Cleans precious jewellery and delicate parts in minutes!

A 0102 RRP $249 **$199**

NEW

Transistor / Diode References

BUY BOTH RRP $79.90 **$69**

A fully up to date reference guide to transistors, diodes, IC's etc.
B 1266 - Volume 1 A-Z
B 1271 - Volume 2 1N-60000µ

Polypropylene Woofers

Perfect for Hi-Fi or PA use. Build your own subwoofers!

C 3065 10" Woofer RRP $129 **$50**

C 3070 12" Woofer RRP $99 **$69**

ATTENTION
New Zealand Customers !

We are proud to announce the recent addition of :-

ELStronics
Located at the Smiths City Centre in Christchurch New Zealand

- to our list of authorised stockists. You may contact them on : Ph: 343 4475 Fax: 3434666 E-mail: sales@elstronics.co.nz

KIT PROJECTS

Guitar Jammer Kit

(SC Oct '00) Practice your tunes without disturbing others.

K 5536 ONLY **$27.95**

Sub Bass Display

(SC Feb '01) Know the level of the bass you are hearing.

New in 2001

K 5410 ONLY **$49.95**

Minimitter

(SC April '01) Mini FM transmitter capable of driving a dipole antenna.

K 1125 ONLY **$42.95**

DC Powermeter Kit

(SC April '01) Build this fantastic mini amplifier with volume, bass and treble controls.

K 3230 ONLY **$59.95**

New in 2001

Stereo Mini Amp

(SC April '01) Build this fantastic 18W 12V amplifier with volume, bass and treble controls.

K 5100 ONLY **$94.95**

AVR Simmstick Kits

A versatile ATMEL programmer ensemble. The K 9510 may be used as a stand alone programmer or as a target board for the K 9515 programmer module. All components, pcb's and instructions are provided to start you off developing ATMEL based projects

K 9510 Simmstick Developer **$34.95**

K 9515 Simmstick Programmer **$64.95**

Guitar Reverb Kit

(SC Jan '01) Add digital effects to a guitar output.

K 5534 ONLY **$79.95**

Speed Alarm Kit

(SC June/July '97) Reduce your fines & save your licence.

K 4290 ONLY **$50**

ALTRONICS
174 Roe St. Perth W.A. 6000
Phone (08) 9328 1599, Fax (08) 9328 3487
MAIL ORDERS C/- P.O. Box 8350
Perth Business Centre, W.A. 6849

We welcome: bankcard, MasterCard, VISA, Diners Club International

Cards Welcome

*No Risk 14 Day Money Back Guarantee: If you are dissatisfied with our goods for any reason, please return to our premises within 14 days of our despatch date and we will refund your purchase in full, less transport costs. All items must in NEW condition.

*12 months minimum warranty: 12 months from date of supply. Goods becoming faulty in this period should be returned to our premises with evidence of purchase and $6 money order, cheque or stamps to cover return postage.

Standard Delivery & Packing Charge: $5.50 to 500gms, $6.60 500gms-1 kg, $9.90 1kg-5kg. Where possible we process your order the day received and despatch via Australia Post. Allow approx 9 days from day you post order to when you receive goods.

*Overnight Jetservice: Up to 3kg in $11, 3kg to 5kg in $18.00—We will process your order the day received (if placed before 2.00PM WST) and despatch for delivery the next day. Country areas please allow an additional 24-48 hours. Not available to PO boxes.

†Offers presented in this advertisement cannot be used in conjunction with any other offers.

Heavy Service: All orders of 10kgs or more must travel Express Road—Please allow up to 7 days for delivery. $13.20 to 10kgs, $16.50 over 10kgs. **Insurance:** As with virtually every other Australian supplier, we send goods at consignee's risk. Should you require insurance cover against loss or damage please add $1.00 per $100 of order value (minimum charge $1). When phone ordering please request "Insurance".

Altronics Resellers: Chances are there is an Altronics Reseller right near you—check our catalogue or phone us for details of your nearest dealer. An up to date reseller listing is available at our internet site at www.altronics.com.au 24 hours a day.

© Altronics 2001 All possible care has been taken to produce this advert and the information contained herein is correct at the time of going to press, however Altronics takes no responsibility for any loss or damage howsoever caused, suffered by a reader with respect to any matter or thing referred to herein. Prices stated herein are only valid for the current month or until stocks run out.

on-line ordering: www.altronics.com.au • fax order line (08) 9328 2487

1-800 999 007 Perth (08) 9328 1599

PRODUCT SHOWCASE

New range of Wavetek "Meterman" test instruments

A new range of high quality digital test instruments has been introduced by Fluke Australia.

Under the "Wavetek Meterman" brand, the range of more than 60 meters ensures that the right test tool is available for the job.

Included are models from digital multimeters to basic and speciality testers for lighting, electrical and electronics testing, clamp-on ammeters, component testers and speciality test tools.

The Meterman range features large displays, extra fusing, safety test leads, "Digiglo" backlighting, live voltage safety testers, wrong input warning beepers and a complete line of accessories.

The HD series of DMMs are described as "oops-proof" and have superior fusing, drop-proof plastic cases and are specially sealed to be waterproof and dustproof.

The XT series, designed for most typical DMM applications, have features such as data hold, max hold and auto-off which are preferred by technicians in equipment repair.

There is also a basic range of multitesters and speciality digital multimeters including pocket size and even a tiny pen-style meter for checking lighting, electrical and electronics functions.

The clamp-on ammeters and DMMs are non-invasive (ie, no connection to the circuit is required) and include meters up to 1000A. There is also a low-cost C/R meter, a handheld LCR meter, logic probes and even a 3MHz function/sweep generator.

One test tool we thought was really neat was a patented wire brush which is designed to find shorts – you simply wipe the brush across, say, a PC board and it beeps if it finds a short.

There's also a range of add-ons and accessories to suit the range including soft and hard-shell carrying cases, replacement and deluxe test lead kits, current transformers and transducers, temperature probes (for those meters which have temperature functions), rubber holsters and replacement fuses.

Pictured is the Wavetek Meterman 85XT, a quality "true RMS" DMM which measures AC/DC to 20A, voltage to 1000V DC and 750V AC, resistance, continuity and also frequency to 200kHz and duty cycle.

We featured this particular meter because one of these is being given away every month to the best contribution to SILICON CHIP's "Circuit Notebook" columns.

The Meterman 85XT is valued at around $380 so is a very worthwhile prize to win – and a very worthwhile addition to any technician's or hobbyist's test equipment armoury. Further details can be found in the "Circuit Notebook" pages.

Contact:
Fluke Australia
Unit 26, 7 Anella Ave Castle Hill NSW 2154
Phone: (02) 8850 3333
Fax (02) 8850 3300
Website: www.metermantesttools.com

FREE
mass SALES & MARKETING
scan-speak
AudioBus
vifa
Authorised Distributors in Australia & New Zealand
SPEAKER PROJECT DOWNLOADS
PLUS all the data, info and price lists you need on world-famous VIFA and ScanSpeak drivers. Build your own or buy ready-made speakers.
visit
www.mass.com.au
sales@mass.com.au
Ph: (08) 9434 4030 Fax: (08) 9434 9423
MasterCard
VISA

Digital TV gear deal from Microgram

Here's a great way to get into Digital TV and save money at the same time. Microgram Computers have a special offer this month on a Thomson Digital TV set-top box) and a 2.4GHz audio/video transmitter/receiver.

With this combination you can watch Digital TV on one TV and also send it to virtually any other TV in your home. The Thomson set-top box was reviewed in SILICON CHIP April 2001.

The two products normally sell for more than $1000 but for this month only, Microgram has them for just $929.00.

Contact:
Microgram Computers
Phone: (02) 4389 8444
Fax (02) 4389 8388
Website: www.mgram.com.au

Oatley's multi-function clever battery charger

Oatley Electronics have come up with another bargain buy: a microprocessor-controlled charger/discharger which was originally designed for mobile phone batteries (and can obviously handle them!) but will also handle most types of Nicad and NiMH batteries of 4.8, 6 and 7.2V, probably much better than the charger supplied with your phone.

You'll need to make up an adaptor to handle your specific battery. And Oatley claim that by changing just one resistor the unit can also charge higher voltage batteries.

It comes complete with a plugpack supply worth around $30 retail – yet the price for the whole thing (charger, plugpack and instructions) is only $30.

Stock is available (until sold out) on a first come, first served basis.

Contact:
Oatley Electronics
Phone: (02) 9584 3563
Fax (02) 9584 3561
Website: www.oatleyelectronics.com.au

AUDIO MODULES
broadcast quality

Manufactured in Australia
Harbuch Electronics Pty Ltd
9/40 Leighton Pl. HORNSBY 2077
Ph (02) 9476-5854 Fx (02) 9476-3231

COMMUNICATIONS SALES MANAGER
PAPUA NEW GUINEA

$80,000 plus benefits

A well established company based in Port Moresby, is looking for a self starter with a proven track-record in communications sales and engineering.
This is a "hands on" position and will require travel throughout the country. The successful candidate will have the following attributes:

1. **Extensive knowledge of HF/VHF/UHF radio systems.**
2. **A mature attitude and ability to communicate at all levels.**
3. **Computer literacy is a prerequisite.**

It would be a further advantage to have experience in public address systems, satellite phones and solar design.

Please send CV to:
The General Manager,
P.O. Box 250, Paddington. Qld. 4064
Fax: 07 33683947 or
email: tmorrow@potterysupplies

Pro-quality kits from DSE

Dick Smith Electronics have submitted two newly-released kits for recent SILICON CHIP projects – and we're impressed.

The kits are for the LP Doctor and the PIC Programmer and TestBed, both of which appeared in the January 2001 issue.

The LP Doctor, in particular, looks so professional you might find it hard to convince friends that you built it! Both kits feature solder-masked PC boards and come with all components and, most importantly, full instructions.

These kits should now be available from all Dick Smith Electronics stores, DSE PowerHouse stores and through DSE phone (1300 366 644) and online (www.dse.com.au) ordering.

NICSHOWCASELECTION

NEW Basic Stamps.
Faster, more powerful
BS2P-24 and BS2P-40
I2C & Dallas 1-Wire support
LCD commands
32 I/O on BS2P-40 unit.
Polled Interrupt.
Faster processor.
16K program space
New Windows Editor.
Serial Keypads & LCD's also.
Now available from:
www.nollet.com.au
Ph/fax (08) 9388-3306
Email: ron@nollet.com.au

Five identical Video and Stereo outputs plus Xphone & monitor out. S-Video & Composite versions available. Professional quality.
For broadcast, audiovisual and film industries. Wide bandwidth, high output and unconditional stability with Sum-cancelling circuitry, front-panel video gain and cable eq adjustments. 240V AC, 100V AC or 24V DC.
High resolution 1in2out VGA splitter. Comes with 1.5m HD cable and 12V supply. Custom-length HQ VGA cables also available.
Check our NEW website for latest prices and MONTHLY SPECIALS
www.questronix.com.au Email: questar@questronix.com.au
Video Processors, Colour Correctors, Stabilisers, TBC's, Converters, etc.
QUESTRONIX
All mail: PO Box 548, Wahroonga NSW 2076
Ph (02) 9477 3596 Fax (02) 9477 3661
Visitors by appointment only

Satellite TV Reception
International satellite TV reception in your home is now affordable. Send for your free info pack containing equipment catalog, satellite lists, etc or call for appointment to view.
We can display all satellites from 76.5° to 180°.
AV-COMM P/L, 24/9 Powells Rd, Brookvale, NSW 2100.
Tel: 02 9939 4377 or 9939 4378.
Fax: 9939 4376; www.avcomm.com.au

MEASURE RF VOLTAGES IN CIRCUIT
- 100kHz – 750MHz @ 10mV sens. (usable to 1.5GHz)
- Up to 70V RMS (100Vpk)
- Use with any standard DMM
- High tensile tip

Why spend $$$$ on a UHF CRO?
RFP540B
Designed & Made in Australia
RF Probes Pty Ltd
PO Box 6, Greensborough 3088
Phone:(03) 94321936 Fax:(03) 9444 7750
Email: admin@rfprobes.com.au
www.rfprobes.com.au

MicroZed Computers
GENUINE STAMP PRODUCTS FROM PARALLAX
Scott Edwards Electronics
microEngineering Labs & others
Easy to learn, easy to use, sophisticated CPU based controllers & peripherals.
PO Box 634, ARMIDALE 2350
(296 Cook's Rd)
Ph (02) 6772 2777 – may time out to Mobile 0409 036 775 Fax (02) 6772 8987
http://www.microzed.com.au
Most Credit Cards OK

Check web site for more info
Programmable arms, walkers and mobiles from robot-Oz
BASIC Stamps®
Cybugs and
Muscle Wire®
"Hexapod 1"
www.robotoz.com.au
Ph: (08) 9370 3456 Fax: (08) 9370 2323

mass SALES & MARKETING vifa
scan-speak
Authorised Distributors in Australia & New Zealand
www.mass.com.au
sales@mass.com.au
PH: (08) 9434 4030
FAX: (08) 9434 9423

T2 Electrical Tester Safety Recall from Fluke Australia

Fluke Australia Pty Ltd has discovered a potential product malfunction which may effect the safety of T2 Electrical Testers and are taking voluntary action to recall this product.

This potential malfunction applies to all T2 units with serial numbers greater than 7351XXXX. These units were shipped from Fluke beginning in June of 1999.

The T2 has the potential to "lock up" in certain circumstances while checking voltages over 400V or in applications where high levels of static electricity or transients are present. When the tester "locks up" it stops working for approximately 8 minutes, after which the tester resets itself.

The user may believe there is no voltage present when in fact there is. This could place the user in a potentially hazardous situation.

Owners of T2 Electrical testers with serial numbers greater than 7351XXXX should send their units back to have the modifications completed. Send units to;

Fluke Australia Service, Unit 26 / 7 Anella Avenue Castle Hill, NSW 2154 or back to their place of purchase. Please include all return delivery addresses. For further information please contact Fluke Australia Pty Ltd, Telephone : (02) 8850 3333 Facsimile : (02) 8850 3300.

Silicon Chip Back Issues

April 1989: Auxiliary Brake Light Flasher; What You Need to Know About Capacitors; 32-Band Graphic Equaliser, Pt.2.

May 1989: Build A Synthesised Tom-Tom; Biofeedback Monitor For Your PC; Simple Stub Filter For Suppressing TV Interference.

July 1989: Exhaust Gas Monitor; Experimental Mains Hum Sniffers; Compact Ultrasonic Car Alarm; The NSW 86 Class Electrics.

September 1989: 2-Chip Portable AM Stereo Radio (Uses MC13024 and TX7376P) Pt.1: High Or Low Fluid Level Detector; Studio Series 20-Band Stereo Equaliser, Pt.2.

October 1989: FM Radio Intercom For Motorbikes Pt.1: GaAsFet Preamplifier For Amateur TV; 2-Chip Portable AM Stereo Radio, Pt.2.

November 1989: Radfax Decoder For Your PC (Displays Fax, RTTY & Morse); FM Radio Intercom For Motorbikes, Pt.2; 2-Chip Portable AM Stereo Radio, Pt.3; Floppy Disk Drive Formats & Options.

January 1990: High Quality Sine/Square Oscillator; Service Tips For Your VCR; Phone Patch For Radio Amateurs; Active Antenna Kit: Designing UHF Transmitter Stages.

February 1990: A 16-Channel Mixing Desk; Build A High Quality Audio Oscillator, Pt.2; The Incredible Hot Canaries; Random Wire Antenna Tuner For 6 Metres; Phone Patch For Radio Amateurs, Pt.2.

March 1990: Delay Unit For Automatic Antennas; Workout Timer For Aerobics Classes; 16-Channel Mixing Desk, Pt.2; Using The UC3906 SLA Battery Charger IC.

April 1990: Dual Tracking +50V Power Supply; Voice-Operated Switch (VOX) With Delayed Audio; 16-Channel Mixing Desk, Pt.3; Active CW Filter; Servicing Your Microwave Oven.

June 1990: Multi-Sector Home Burglar Alarm; Build A Low-Noise Universal Stereo Preamplifier; Load Protector For Power Supplies.

July 1990: Digital Sine/Square Generator, Pt.1 (covers 0-500kHz); Burglar Alarm Keypad & Combination Lock; Build A Simple Electronic Die; A Low-Cost Dual Power Supply.

August 1990: High Stability UHF Remote Transmitter; Universal Safety Timer For Mains Appliances (0 Minutes); Horace The Electronic Cricket; Digital Sine/Square Generator, Pt.2.

September 1990: A Low-Cost 3-Digit Counter Module; Build A Simple Shortwave Converter For The 2-Metre Band; The Care & Feeding Of Nicad Battery Packs (Getting The Most From Nicad Batteries).

October 1990: The Dangers of PCBs; Low-Cost Siren For Burglar Alarms; Dimming Controls For The Disco light; Surfsound Simulator; DC Offset For DMMs; NE602 Converter Circuits.

November 1990: Connecting Two TV Sets To One VCR; Build An Egg Timer; Low-Cost Model Train Controller; 1.5V To 9V DC Converter; Introduction To Digital Electronics; A 6-Metre Amateur Transmitter.

December 1990: 100W DC-DC Converter For Car Amplifiers; Wiper Pulser For Rear Windows; 4-Digit Combination Lock; 5W Power Amplifier For The 6-Metre Amateur Transmitter; Index To Volume 3.

January 1991: Fast Charger For Nicad Batteries, Pt.1; Have Fun With The Fruit Machine (Simple Poker Machine); Build A Two-Tone Alarm Module; The Dangers of Servicing Microwave Ovens.

March 1991: Transistor Beta Tester Mk.2; A Synthesised AM Stereo Tuner, Pt.2; Multi-Purpose I/O Board For PC-Compatibles; Universal Wideband RF Preamplifier For Amateur Radio & TV.

April 1991: Steam Sound Simulator For Model Railroads; Simple 12/24V Light Chaser; Synthesised AM Stereo Tuner, Pt.3; A Practical Approach To Amplifier Design, Pt.2.

May 1991: 13.5V 25A Power Supply For Transceivers; Stereo Audio Expander; Fluorescent Light Simulator For Model Railways; How To Install Multiple TV Outlets, Pt.1.

July 1991: Loudspeaker Protector For Stereo Amplifiers; 4-Channel Lighting Desk, Pt.2; How To Install Multiple TV Outlets, Pt.2; Tuning In To Satellite TV, Pt.2.

September 1991: Digital Altimeter For Gliders & Ultralights; Ultrasonic Switch For Mains Appliances; The Basics Of A/D & D/A Conversion; Plotting The Course Of Thunderstorms.

October 1991: Build A Talking Voltmeter For Your PC, Pt.1; SteamSound Simulator For Model Railways Mk.II; Magnetic Field Strength Meter; Digital Altimeter For Gliders, Pt.2; Military Applications Of R/C Aircraft.

November 1991: Colour TV Pattern Generator, Pt.1; A Junkbox 2-Valve Receiver; Flashing Alarm Light For Cars; Digital Altimeter For Gliders, Pt.3; Build A Talking Voltmeter For Your PC, Pt.2.

December 1991: TV Transmitter For VCRs With UHF Modulators; Infrared Light Beam Relay; Colour TV Pattern Generator, Pt.2; Index To Volume 4.

January 1992: 4-Channel Guitar Mixer; Adjustable 0-45V 8A Power Supply, Pt.1; Baby Room Monitor/FM Transmitter; Experiments For Your Games Card.

March 1992: TV Transmitter For VHF VCRs; Thermostatic Switch For Car Radiator Fans; Coping With Damaged Computer Directories; Valve Substitution In Vintage Radios.

April 1992: IR Remote Control For Model Railroads; Differential Input Buffer For CROs; Understanding Computer Memory; Aligning Vintage Radio Receivers, Pt.1.

June 1992: Multi-Station Headset Intercom; Pt.1: Video Switcher For Camcorders & VCRs; IR Remote Control For Model Railroads, Pt.3; 15-Watt 12-240V Inverter; A Look At Hard Disk Drives.

August 1992: Automatic SLA Battery Charger; Miniature 1.5V To 9V DC Converter; 1kW Dummy Load Box For Audio Amplifiers; Troubleshooting Vintage Radio Receivers; The MIDI Interface Explained.

October 1992: 2kW 24VDC - 240VAC Sinewave Inverter; Multi-Sector Home Burglar Alarm, Pt.2; Mini Amplifier For Personal Stereos; A Regulated Lead-Acid Battery Charger.

January 1993: Flea-Power AM Radio Transmitter; High Intensity LED Flasher For Bicycles; 2kW 24VDC To 240VAC Sinewave Inverter; Pt.4; Speed Controller For Electric Models, Pt.3.

February 1993: Three Projects For Model Railroads; Low Fuel Indicator For Cars; Audio Level/VU Meter (LED Readout); An Electronic Cockroach; 2kW 24VDC To 240VAC Sinewave Inverter; Pt.5.

March 1993: Solar Charger For 12V Batteries; Alarm-Triggered Security Camera; Reaction Trainer; Audio Mixer for Camcorders; A 24-Hour Sidereal Clock For Astronomers.

April 1993: Solar-Powered Electric Fence; Audio Power Meter; Three-Function Home Weather Station; 12VDC To 70VDC Converter; Digital Clock With Battery Back-Up.

June 1993: AM Radio Trainer, Pt.1; Remote Control For The Woofer Stopper; Digital Voltmeter For Cars; Windows-Based Logic Analyser.

July 1993: Single Chip Message Recorder; Light Beam Relay Extender; AM Radio Trainer, Pt.2; Quiz Game Adjudicator; Windows-Based Logic Analyser, Pt.2; Antenna Tuners – Why They Are Useful.

August 1993: Low-Cost Colour Video Fader; 60-LED Brake Light Array; Microprocessor-Based Sidereal Clock; A Look At Satellites & Their Orbits.

September 1993: Automatic Nicad Battery Charger/Discharger; Stereo Preamplifier With IR Remote Control, Pt.1; In-Circuit Transistor Tester; +5V to +15V DC Converter; Remote-Controlled Cockroach.

October 1993: Courtesy Light Switch-Off Timer For Cars; Wireless Microphone For Musicians; Stereo Preamplifier With IR Remote Control, Pt.2; Electronic Engine Management, Pt.1.

November 1993: High Efficiency Inverter For Fluorescent Tubes; Stereo Preamplifier With IR Remote Control, Pt.3; Siren Sound Generator; Engine Management, Pt.2; Experiments For Games Cards.

December 1993: Remote Controller For Garage Doors; Build A LED Stroboscope; Build A 25W Audio Amplifier Module; A 1-Chip Melody Generator; Engine Management, Pt.3; Index To Volume 6.

January 1994: 3A 40V Variable Power Supply; Solar Panel Switching Regulator; Printer Status Indicator; Mini Drill Speed Controller; Stepper Motor Controller; Active Filter Design; Engine Management, Pt.4.

February 1994: Build A 90-Second Message Recorder; 12-240VAC 200W Inverter; 0.5W Audio Amplifier; 3A 40V Adjustable Power Supply; Engine Management, Pt.5; Airbags In Cars – How They Work.

March 1994: Intelligent IR Remote Controller; 50W (LM3876) Audio Amplifier Module; Level Crossing Detector For Model Railways; Voice Activated Switch For FM Microphones; Engine Management, Pt.6.

April 1994: Sound & Lights For Model Railway Level Crossings; Discrete Dual Supply Voltage Regulator; Universal Stereo Preamplifier; Digital Water Tank Gauge; Engine Management, Pt.7.

May 1994: Fast Charger For Nicad Batteries; Induction Balance Metal Locator; Multi-Channel Infrared Remote Control; Dual Electronic Dice; Simple Servo Driver Circuits; Engine Management, Pt.8.

June 1994: 200W/350W Mosfet Amplifier Module; A Coolant Level Alarm For Your Car; 6-Metre AM/CW Transmitter For Amateurs; Converting Phono Inputs To Line Inputs; PC-Based Nicad Battery Monitor; Engine Management, Pt.9.

July 1994: Build A 4-Bay Bow-Tie UHF TV Antenna; PreChamp 2-Transistor Preamplifier; Steam Train Whistle & Diesel Horn Simulator; 6V SLA Battery Charger; Electronic Engine Management, Pt.10.

August 1994: High-Power Dimmer For Incandescent Lights; Microprocessor-Controlled Morse Keyer; Dual Diversity Tuner For FM Microphones, Pt.1; Nicad Zapper (For Resurrecting Nicad Batteries); Engine Management, Pt.11.

September 1994: Automatic Discharger For Nicad Battery Packs; 6M/4m Voice Keyer & 6-Metre AM/CW Transmitter For Amateurs; Radio For Weather Beacons; Dual Diversity Tuner For FM Microphones; Pt.2; Engine Management, Pt.12.

October 1994: How Dolby Surround Sound Works; Dual Rail Variable Power Supply; Build A Talking Headlight Reminder; Electronic Ballast For Fluorescent Lights; Build A Temperature Controlled Soldering Station; Electronic Engine Management, Pt.13.

November 1994: Dry Cell Battery Rejuvenator; Novel Alphanumeric Clock; 80-Metre DSB Amateur Transmitter; Twin-Cell Nicad Discharger (See May 1993); How To Plot Patterns Direct to PC Boards.

December 1994: Easy-To-Build Car Burglar Alarm; Three-Spot Low Distortion Sinewave Oscillator; Clifford – A Pesky Electronic Cricket; Remote Control System for Models, Pt.1; Index to Vol.7.

January 1995: Sun Tracker For Solar Panels; Battery Saver For Torches; Dolby Pro-Logic Surround Sound Decoder, Pt.2; Dual Channel UHF Remote Control; Stereo Microphone Preamplifier.

February 1995: 50-Watt/Channel Stereo Amplifier Module; Digital Effects Unit For Musicians; 6-Channel Thermometer With LCD Readout; Wide Range Electrostatic Loudspeakers, Pt.1; Oil Change Timer For Cars; Remote Control System For Models, Pt.2.

March 1995: 50 Watt Per Channel Stereo Amplifier, Pt.1; Subcarrier Decoder For FM Receivers; Wide Range Electrostatic Loudspeakers, Pt.2; IR Illuminator For CCD Cameras; Remote Control System For Models, Pt.3; Simple CW Filter.

April 1995: FM Radio Trainer, Pt.1; Photographic Timer For Darkrooms; Balanced Microphone Preamp. & Line Filter; 50W/Channel Stereo Amplifier, Pt.2; Wide Range Electrostatic Loudspeakers, Pt.3;

15% OFF TO SUBSCRIBERS OR IF YOU BUY 10 OR MORE!

ORDER FORM

Please send the following back issues:

Enclosed is my cheque/money order for $_____ or please debit my: ☐ Bankcard ☐ Visa Card ☐ Master Card

Card No. _____

Signature _____ Card expiry date_____ /_____

Name _____ Phone No (___) _____
PLEASE PRINT

Street _____

Suburb/town _____ Postcode _____

Note: prices include postage & packing

Australia ..... $A7.70 (incl. GST)

Overseas (airmail) $A10

Detach and mail to:
Silicon Chip Publications, PO Box 139, Collaroy, NSW, Australia 2097.
Or call (02) 9979 5644 & quote your credit card details or fax the details to (02) 9979 6503.
Email: silchip@siliconchip.com.au

8-Channel Decoder For Radio Remote Control.

May 1995: Build A Guitar Headphone Amplifier; FM Radio Trainer, Pt.2; Transistor/Mosfet Tester For DMMs; A 16-Channel Decoder For Radio Remote Control; Introduction to Satellite TV.

June 1995: Build A Satellite TV Receiver; Train Detector For Model Railways, TV Audio Amplifier Trainer; Low-Cost Video Security System; Multi-Channel Radio Control Transmitter For Models, Pt.1.

July 1995: Electric Fence Controller; How To Run Two Trains On A Single Track (incl. Sidings & Sound); Setting Up A Satellite TV Ground Station; Build A Reliable Door Minder.

August 1995: Fuel Injector Monitor For Cars; Gain Controlled Microphone Preamp; Audio Lab PC-Controlled Test Instrument, Pt.1; How To Identify IDE Hard Disk Drive Specifications.

September 1995: Railpower Mk.2 Walkaround Throttle For Model Railways, Pt.1; Keypad Combination Lock; The Vader Voice; Jacob's Ladder Display; Audio Lab PC-Controlled Test Instrument, Pt.2.

October 1995: 3-Way Bass Reflex Loudspeaker System; Railpower Mk.2 Walkaround Throttle For Model Railways, Pt.2; Fast Charger For Nicad Batteries; Digital Speedometer & Fuel Gauge For Cars, Pt.1.

November 1995: Mixture Display For Fuel Injected Cars; CB Transverter For The 80M Amateur Band, Pt.1; PIR Movement Detector; Digital Speedometer & Fuel Gauge For Cars, Pt.2.

December 1995: Engine Immobiliser; 5-Band Equaliser; CB Transverter For The 80M Amateur Band, Pt.2; Subwoofer Controller; Knock Sensing in Cars; Index To Volume 8.

January 1996: Surround Sound Mixer & Decoder, Pt.1; Magnetic Card Reader; Build An Automotive Voltmeter; IR Remote Control For The Railpower Mk.2; Recharging Nicad Batteries For Long Life.

April 1996: Cheap Battery Refills For Mobile Telephones; 125W Audio Power Amplifier Module; Knock Indicator For Leaded Petrol Engines; Multi-Channel Radio Control Transmitter, Pt.3; Cathode Ray Oscilloscopes, Pt.2.

May 1996: Upgrading The CPU In Your PC; High Voltage Insulation Tester; Adjustable Bi-Directional LED Chaser; Simple Quadraphonic Intercom Using Fibre Optic Cable; Cathode Ray Oscilloscopes, Pt.3.

June 1996: BassBox CAD Loudspeaker Software Reviewed; Stereo Simulator (uses delay chip); Rope Light Chaser; Low Ohms Tester For Your DMM; Automatic 10A Battery Charger.

July 1996: Build A VGA Digital Oscilloscope, Pt.1; Remote Control Extender For VCRs; 2A SLA Battery Charger; 3-Band Parametric Equaliser; Single Channel 8-bit Data Logger.

August 1996: Introduction to IGBTs; Electronic Starter For Fluorescent Lamps; VGA Oscilloscope, Pt.2; Stepper Motor Amplifier Module; Masthead Amplifier For TV & FM; Cathode Ray Oscilloscopes, Pt.4.

September 1996: VGA Oscilloscope, Pt.3; IR Stereo Headphone Link, Pt.1; High Quality PA Loudspeaker, 3-Band HF Amateur Radio Receiver; Cathode Ray Oscilloscopes, Pt.5.

October 1996: Send Video Signals Over Twisted Pair Cable; Power Control With A Light Dimmer; 600W DC-DC Converter For Car Hifi Systems, Pt.1; IR Stereo Headphone Link, Pt.2; Build A Multi-Media Sound System, Pt.1; Multi-Channel Radio Control Transmitter, Pt.8.

November 1996: Adding A Parallel Port To Your Computer; 8-Channel Stereo Mixer, Pt.1; Low-Cost Fluorescent Light Inverter; How To Repair Domestic Light Dimmers; Build A Multi-Media Sound System, Pt.2; 600W DC-DC Converter For Car Hifi Systems, Pt.2.

December 1996: Active Filter Cleans Up Your CW Reception; A Fast Clock For Railway Modellers; Laser Pistol & Electronic Target; Build A Sound Level Meter; 2-Channel Stereo Mixer, Pt.2; Index To Volume 9.

January 1997: How To Network Your PC; Control Panel For Multiple Smoke Alarms, Pt.1; Build A Pink Noise Source, Computer Controlled Dual Power Supply, Pt.1; Digi-Temp Monitors Eight Temperatures.

February 1997: Cathode Ray Oscilloscopes, Pt.6; PC-Controlled Moving Message Display; Computer Controlled Dual Power Supply, Pt.2; The Alert-A-Phone Loud Sounding Telephone Alarm; Build A Control Panel For Multiple Smoke Alarms, Pt.2.

March 1997: Driving A Computer By Remote Control; Plastic Power PA Amplifier (175W); Speed & Lighting For Model Railways; Build A Jumbo LED Clock; Cathode Ray Oscilloscopes, Pt.7.

April 1997: Simple Timer With No ICs; Digital Voltmeter For Cars; Loudspeaker Protector For Stereo Amplifiers; Model Train Controller; A Look At Signal Tracing; Pt.1; Cathode Ray Oscilloscopes, Pt.8.

May 1997: Neon Tube Modulator For Light Systems; Traffic Lights For A Model Intersection; The Spacewriter – It Writes Messages In Thin Air; A Look At Signal Tracing; Pt.2; Cathode Ray Oscilloscopes, Pt.9.

June 1997: PC-Controlled Thermometer/Thermostat; Colour TV Pattern Generator, Pt.1; Build An Audio/RF Signal Tracer; High-Current Speed Controller For 12V/24V Motors; Manual Control Circuit For A Stepper Motor; Cathode Ray Oscilloscopes, Pt.10.

July 1997: Infrared Remote Volume Control; A Flexible Interface Card For PCs; Points Controller For Model Railways; Colour TV Pattern Generator, Pt.2; An In-Line Mixer For Radio Control Receivers.

August 1997: The Bass Barrel Subwoofer; 500 Watt Audio Power Amplifier Module; A 1GHz Unit For Pulse Relief; Addressable PC Card For Stepper Motor Control; Remote Controlled Games For Your Home.

September 1997: Multi-Spark Capacitor Discharge Ignition; 500W Audio Power Amplifier, Pt.2; A Video Security System For Your Home; PC Card For Controlling Two Stepper Motors; HiFi On A Budget.

October 1997: Build A 5-Digit Tachometer; Add Central Locking To Your Car; PC-Controlled 6-Channel Voltmeter; 500W Audio Power Amplifier, Pt.3; Customising The Windows 95 Start Menu.

November 1997: Heavy Duty 10A 240VAC Motor Speed Controller; Easy-To-Use Cable & Wiring Tester; Build A Musical Doorbell; Replacing Foam Speaker Surrounds; Understanding Electric Lighting Pt.1.

December 1997: Build A Speed Alarm For Your Car; Two-Axis Robot Driver With Onboard Buffer; Power Supply For Stepper Motor Cards; Understanding Electric Lighting Pt.2; Index To Volume 10.

January 1998: Build Your Own 4-Channel Lightshow, Pt.1 (runs off 12VDC or 12VAC); Command Control System For Model Railways, Pt.1; Pic-Programmer For CCD Cameras; Build A One Or Two-Lamp Flasher; Understanding Electric Lighting, Pt.3.

February 1998: Multi-Purpose Fast Battery Charger; Pt.1; Telephone Exchange Simulator For Testing; Command Control System For Model Railways, Pt.2; Build Your Own 4-Channel Lightshow, Pt.2; Understanding Electric Lighting, Pt.4.

April 1998: Automatic Garage Door Opener, Pt.1; 40V 8A Adjustable Power Supply, Pt.1; PC-Controlled 0-30kHz Sinewave Generator; Build A Laser Light Show; Understanding Electric Lighting; Pt.6.

May 1998: Troubleshooting Your PC, Pt.1; Build A 3-LED Logic Probe; Automatic Garage Door Opener, Pt.2; Command Control For Model Railways, Pt.4; 40V 8A Adjustable Power Supply, Pt.2.

June 1998: Troubleshooting Your PC, Pt.2; Understanding Electric Lighting, Pt.7; Universal High Energy Ignition System; The Readies' Friend Cable Tester; Universal Stepper Motor Controller; Command Control For Model Railways, Pt.5.

July 1998: Troubleshooting Your PC, Pt.3 (Installing A Modem And Solving Problems); Build A Heat Controller; 15-Watt Class-A Audio Amplifier Module; Simple Charger For 6 & 12V Lead Acid Batteries; Automotive Exhaust Gas Analyser; Understanding Electric Lighting, Pt.8.

August 1998: Troubleshooting Your PC, Pt.4 (Adding Extra Memory); Build The Opus One Loudspeaker System; Simple I/O Card With Automatic Data Logging; Automatic 4-Bear Triggered Strobe; A 15-Watt Per Channel Class-A Stereo Amplifier.

September 1998: Troubleshooting Your PC, Pt.5 (Software Problems & DOS Games); A Blocked Air-Filter Alarm; A Wax-Wax Petal For Your Guitar; Build A Plasma Display; Simple Data Logger; Gear Change Indicator For Cars; Capacity Indicator For Rechargeable Batteries.

October 1998: Lab Quality AC Millivoltmeter, Pt.1; PC-Controlled Stress-O-Meter; Versatile Electronic Guitar Tuner; 12V Trickle Charger For Float Conditions; Adding An Extra Battery Pack To Your Flashgun.

November 1998: The Christmas Star (Microprocessor-Controlled Christmas Decoration); A Turbo Timer For Cars; Build A Poker Machine, Pt.1; IM Transmitter/Receiver For Microphone; Lab Quality AC Millivoltmeter, Pt.2; Setting Up A LAN Using TCP/IP; Understanding Electric Lighting, Pt.9; Improving AM Radio Reception, Pt.1.

December 1998: Protect Your Car With The Engine Immobiliser Mk.2; Thermocouple Adaptor For DMMs; A Regulated 12V DC Plugpack; Build Your Own Poker Machine, Pt.2; Improving AM Radio Reception, Pt.2; Mixer Module For F3B Glider Operations.

January 1999: High-Voltage Megohm Tester; Getting Started With BASIC Stamp; LED Bargraph Musician; Lux Cars; Keypad Engine Immobiliser; Improving AM Radio Reception, Pt.3; Electric Lighting, Pt.10.

February 1999: Installing A Computer Network; Making Front Panels For Your Projects; Low Distortion Audio Signal Generator, Pt.1; Command Control Decoder For Model Railways; Build A Digital Capacitance Meter; Electric Lighting Control Using Electronic Lighting, Pt.11.

March 1999: Getting Started With Linux; Pt.1; Build A Digital Anemometer; 3-Channel Current Monitor With Data Logging, Simple DIY PIC Programmer; Easy-To-Build Audio Amplifier; Low Distortion Audio Signal Generator; Pt.2; Electric Lighting, Pt.12.

April 1999: Getting Started With Linux, Pt.2; High-Power Electric Fence Controller; Bass Cube Subwoofer; Programmable Thermostat/Thermometer; Build An Infrared Sentry; Rev Limiter For Cars; Electric Lighting, Pt.13; Autopilots For Radio-Controlled Model Aircraft.

May 1999: The Line Dancer Robot; An X-Y Table With Stepper Motor Control, Pt.1; Three Electric Fence Testers; Heart Of LEDs; Build A Carbon Monoxide Alarm; Getting Started With Linux; Pt.3.

June 1999: FM Radio Tuner Card For PCs; X-Y Table With Stepper Motor Control, Pt.2; Programmable Ignition Timing Module For Cars, Pt.1; Hard Disk Drive Upgrades Without Reinstalling Software; What Is A Groundplane Antenna?; Getting Started With Linux; Pt.4.

July 1999: Build The Dog Silencer; A 10µH to 10.99mH Inductance Meter; Build An Audio-Video Transmitter; Programmable Ignition Timing Module For Cars, Pt.2; X'Z Table With Stepper Motor Control, Pt.3; The Hexapod Robot.

August 1999: Remote Modem Controller; Daytime Running Lights For Cars; Build A PC Monitor Checker; Switching Temperature Controller; X'Z Table With Stepper Motor Control, Pt.4; Electric Lighting, Pt.14; DOS & Windows Utilities For Reversing Printed PC Board Files.

September 1999: Automatic Addressing On TCP/IP Networks; Autonomouse The Robot, Pt.1; Voice Direct Speech Recognition Module; Digital Electrolytic Capacitance Meter; X'Z Table With Stepper Motor Control, Pt.5; Petliet-Powered Can Cooler.

October 1999: Sharing A Modem For Internet & Email Access (Windate); Build The Railpower Model Train Controller, Pt.1; Semiconductor Curve Tracer: Autonomouse The Robot, Pt.2; X'Z Table With Stepper Motor Control, Pt.6; Introducing Home Theatre.

November 1999: Electric Lighting, Pt.15; Setting Up An Email Server; Speed Alarm For Cars, Pt.1; Multi-Colour LED Christmas Tree; Build An Intercom Station Expander; Foldback Loudspeaker System For Musicians; Railpower Model Train Controller, Pt.2.

December 1999: Internet Connection Sharing Using Hardware; Electric Lighting, Pt.16; Build A Solar Panel Regulator; The PC Powerhouse (gives fixed +12V, +9V, +6V & +5V rails); The Fortune Finder Metal Locator; Speed Alarm For Cars, Pt.2; Railpower Model Train Controller, Pt.3; Index To Volume 12.

January 2000: Spring Reverberation Module; An Audio-Video Test Generator; Build The Ramon Programmable Robot; A Parallel Port Interface Card; Off-Hook Indicator For Telephone Lines; B&W Nautilus 801 Monitor Loudspeakers (Review).

February 2000: Multi-Sector Sprinkler Controller; A Digital Voltmeter For Your Car; An Automotive Parking Radar; Build A Safety Switch Checker; Build A Sine/Square Wave Oscillator; Marantz SR-18 Home Theatre Receiver (Review); The "Hot Chip" Starter Kit (Review).

March 2000: Doing A Lazarus On An Old Computer; Ultra Low Distortion 100W Amplifier Module, Pt.1; Electronic Wind Vane With 16-LED Display; Glowplug Driver For Powered Models; The OzTrip Car Computer, Pt.1; Multi-Channel Circuit Design & Simulation Package (Review).

April 2000: A Digital Tachometer For Your Car; RoomGuard – A Low-Cost Intruder Alarm; Build A Hot wire Cutter; The OzTrip Car Computer, Pt.2; Build A Temperature Logger; Atmel's ICE 200 In-Circuit Emulator; The ESR Meter – A 3-Probe Inductor Meter (Review).

May 2000: Ultra-LD Stereo Amplifier, Pt.2; Build A LED Dice (With PIC Microcontroller); Low-Cost AT Keyboard Translator (Converts IBM Scan-Codes To ASCII); 50A Motor Speed Controller For Models; What's Inside A PC.

June 2000: Automatic Rain Gauge With Digital Readout; Parallel Port VHF FM Receiver; Li'l Powerhouse Switchmode Power Supply (1.23V to 40V) Pt.1; CD Compressor For Cars Or The Home.

July 2000: A Moving Message Display; Compact Fluorescent Lamp Driver; Electronic Mosquito Repeller; Lead Tester; Li'l Powerhouse Switchmode Power Supply (1.23V to 40V) Pt.2; Say Bye-Bye To Your 12V Car Battery.

August 2000: Build A Theremin For Really Eerie Sounds; Come In Spinner (writes messages in "thin-air"); Loudspeaker Protector & Fan Controller For The Ultra-LD Stereo Amplifier; Proximity Switch For 240VAC Lamps; Electronic Load Box For Computer Supplies.

September 2000: Build A Swimming Pool Alarm; An 8-Channel PC Relay Board; Fuel Mixture Display For Cars, Pt.1; Protoboards – The Easy Way Into Electronics, Pt.1; Cybug The Solar Fly; Network Troubleshooting With Fluke's NetTool.

October 2000: Guitar Jammer For Practice & Jam Sessions; Booze Buster Breath Tester; A Wand-Mounted Inspection Camera); Installing A Free-Air Transmitter In Your Car; Fuel Mixture Display For Cars, Pt.2; Protoboards – The Easy Way Into Electronics, Pt.2.

November 2000: Santa & Rudolf Christie Display; 2-Channel Guitar Preamplifier, Pt.1; Message Bank & Missed Call Alert; Electronic Thermostat Probes – The Easy Way Into Electronics, Pt.3.

December 2000: Home Networking For Shared internet Access; Build A Bright-White LED Torch; 2-Channel Guitar Preamplifier, Pt.2 (Digital Reverb); Driving An LCD From The Parallel Port; Build A Quartz Clock; Protoboards – The Easy Way Into Electronics, Pt.4; Index To Vol.13.

January 2001: LP Resurrection – Transferring LPs & Tapes To CD; The LP Doctor – Clean Up Clicks & Pops, Pt.1; Arbitrary Waveform Generator; 2-Channel Guitar Preamplifier, Pt.3; PIC Programmer & Testbed; Wireless Networking.

February 2001: How To Observe Meteors Using Junked Gear; An Easy Way To Make PC Boards; Li'l Pulser Train Controller; Midi-Mate – A MIDI Interface For PCs; Build The Bass Blazer, 2-Metre Elevated Groundplane Antenna; The LP Doctor – Clean Up Clicks & Pops, Pt.2.

March 2001: Driving Your Phone From A PC; Making Photo Resist PC Boards At Home; Big-Digit 12/24 Hour Clock; Parallel Port PIC Programmer & Checkerboard Controller Boards – The Easy Way Into Electronics, Pt.5; More MIDI – A Simple MIDI Expansion Box.

April 2001: A GPS Module For Your PC; Dr Video – An Easy-To-Build Video Stabiliser; A Tremolo Unit For Musicians; Minimitter FM Stereo Transmitter Intelligent Nicad Battery Charger; Computer Tips – Tweaking Internet Connection Sharing.

May 2001: Powerful 12V Mini Stereo Amplifier; Microcontroller-Based 4-Digit Counter Module; Two 4Mbit LED Torches To Build; A Servo With Lots Of Grunt; PowerPak – A Multi-Voltage Power Supply; Using Linux To Share An Internet Connection; Computer Tips – Tweaking Windows With TweakGui.

PLEASE NOTE: November 1987 to March 1989, June 1989, August 1989, December 1989, May 1990, February 1991, June 1991, August 1991, February 1992, July 1992, September 1992, November 1992, December 1992, May 1993, February 1996 and March 1998 are now sold out. All other issues are presently in stock. For readers wanting articles from sold-out issues, we can supply photostat copies (or hard sheets) at $7.70 per article (includes p&p). When supplying photostat articles or back copies, we automatically supply any relevant notes & errata at no extra charge. A complete index to all articles published to date is available on floppy disk for $11 including p&p, or can be downloaded free from our web site: www.siliconchip.com.au

VINTAGE RADIO

By RODNEY CHAMPNESS, VK3UG

The miniature STC A-141 mantle radio

Miniature is a relative term – what was classed as a miniature valve radio in the late 1940s is considered huge today. The set described here is a basic receiver, designed to fit as much as possible into a small cabinet. The parts are crammed together and there is very little space above the heat-producing valves for ventilation.

The market for polished timber, elaborate console radios in the lounge had virtually been saturated by the late 40s and hence sales were falling. Manufacturers and particularly their sales people were exploring any avenue to expand sales. Suddenly they had the bright idea that the lady of the house could be persuaded to listen to a simple set tuned to local stations which poured forth the "soapies" of the day.

As the lady of the house was considered to be chained to the kitchen, the set was designed to be placed on the mantle-piece above the stove. The attitude of the day tended to be that the lounge console belonged to the man of the house and he was the main operator. The lady of the house could have a simple small set perched on the mantle piece to keep her happy.

The gentleman's ego would not be bruised by the lady having a set of her own because it didn't compare with his and didn't cost anywhere near as much. That tended to be the attitude towards women and radio in those days.

The STC A-141 came in a very compact case and was regarded as a miniature set in its time.

The STC A141

This model and its brothers, the 141, the B-141 and the C-141 are reasonably popular items with collectors. The receiver is installed in an attractive Bakelite cabinet, just big enough to house the set, with little room to spare.

This particular set had a broken cabinet when I received it for restoration. However I was able to repair it, with the assistance of a colleague at Kyabram. This is the subject of another article on cabinet restoration. Whilst the cabinet restoration hasn't hidden all the break lines completely, it has meant that an interesting little set is now fully functional and looks almost like new.

So if you have a set that has a broken Bakelite cabinet, don't think that it is impossible to repair.

Separating the chassis from the cabinet is quite an easy task. Two screws, one near the aerial lead and the other near the power lead, on the back of the chassis are removed, the two knobs are removed and the chassis is slid out of the case. The speaker and most of the dial are attached to the chassis too. The actual dial scale is attached

The parts on the top of the A-141's chassis are very tightly packed together, although access is reasonable.

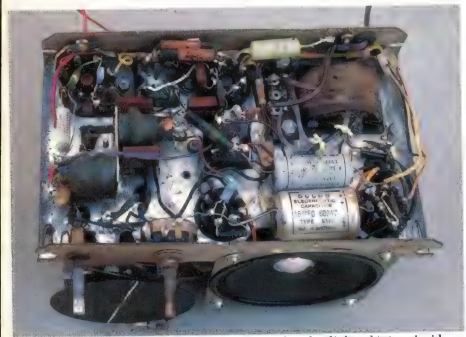

The under-chassis view of the STC A-141. Note that the dial scale stays inside the cabinet.

to the front of the cabinet which is a pest when it comes to aligning the tuned circuits for correct tracking across the dial. I'll talk about this problem later.

The circuitry of the A-141 is quite conventional, with a 6K8GT converter, a 6G8G IF and second detector/AGC and a 6AG6G (or KT61) audio output. The original 141 had no automatic gain control (AGC), using only manual volume control with a 6V6GT in the audio stage. The B-141 and the C-141 are reflexed sets and both use a 6V6GT in the audio output.

After looking at the circuitry on all of these models, it appears that the C-141 would have been the pick of them in regard to performance.

While this set is marked as an A-141, it appears that the delayed AGC bias network to V1 and V2 had its shortcomings. As can be seen, R9, a 1MΩ resistor, comes directly from the centre-tap of the power transformer HT secondary. This puts quite a bit of hum into the detection circuit. If the circuit is to be believed, the AGC bypass capacitor is 25μF (to filter the hum?), which would give a time constant of 55 seconds for the AGC to settle.

In this particular set R9 is made up of two 0.5MΩ resistors. The junction of the two resistors has a 0.25μF capacitor connected between it and the chassis. This filters out the hum from the back bias cum delayed AGC line quite effectively. C3 is .05μF and the system works quite satisfactorily.

The power supply uses a 6X5GT rectifier. It is a little different to most, in that the filter choke is in the negative lead. This is not a common way of accomplishing the filtering but is quite reasonable and means that the choke has virtually no stress on its insulation between core and winding.

STC used this method quite a bit and it was also used in a significant number of broadcast radio transmitters to reduce the insulation stress in the filter choke. In the case of transmitters, the voltage between winding and core could be 10kV or more if it was placed in the high tension positive lead.

Restoring the set

The set was first given a good clean, being dusted out with a small paint brush. A vacuum cleaner on the blowing mode can be useful too. Some people use air compressors but be very careful when using this method as the tuning capacitor plates can be damaged.

I clean the gunk off with a kitchen scourer soaked in household kerosene. The scourer can be cut into small pieces or into a strip to make the job easier. A rag soaked in kerosene can be effective in some areas too.

Rusty areas will respond to the scourer treatment but there are other methods some find effective. A mixture of molasses and water or bread and water works well according to another restorer I know. I can't vouch for it myself.

It is obvious from the photographs that I haven't repainted and re-stencilled the chassis. Whether a receiver chassis should be cleaned and then left as is, or whether it should be

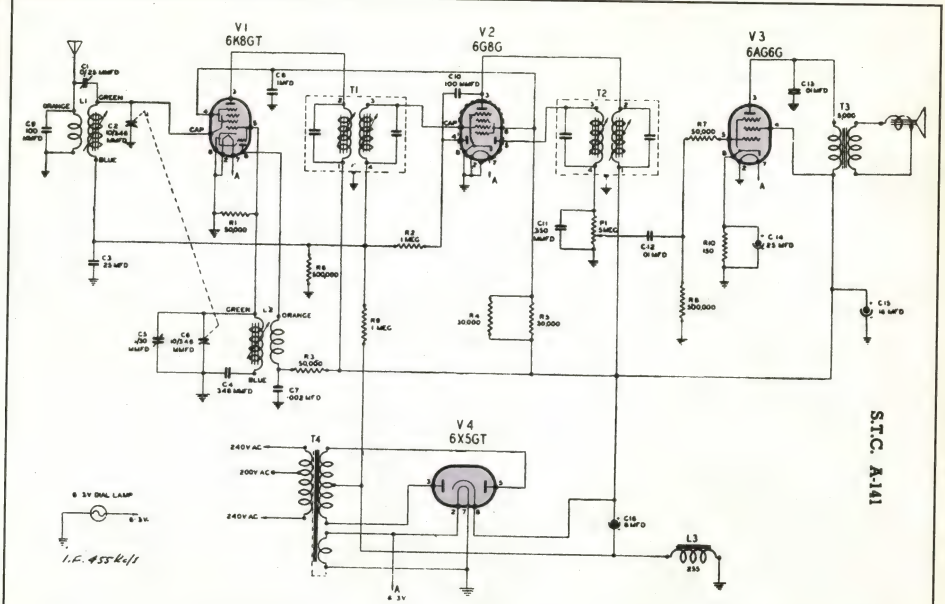

The STC A-141 was a 4-valve reflex set designed for local reception. Note that the filter inductor, L3, is in the negative HT return which has the benefit of low voltage stress on its windings.

stripped down with all parts removed, cleaned and repainted or plated and re-stencilled is a vexing question. Some believe sets should look as though they've been around a bit while others believe that sets should be in pristine condition.

I don't believe there is any definite answer to this question. The first option entails a reasonable amount of work. The second option is, however, a very big undertaking and the question that is often asked then is, "Is it authentic?"

The circuitry

A few odd things had been done to the set by someone in the past; nothing bad, just different. The 6G8G had been replaced with a 6K7G, most probably because whoever had previously worked on the set didn't have a 6G8G. They both work well as the IF amplifier but the 6K7G has no diodes to act in the detector and AGC circuits. To overcome this problem two germanium diodes had been used and they did quite a satisfactory job, as you would expect. As I had a 6G8G, I restored the circuit to standard.

The leaky paper capacitors were replaced. The most critical ones in this circuit are C3, C12 and C13. Here is an interesting little question for you. What happens when C12 (attached to the volume control moving arm) becomes leaky? What is the effect on the receiver's performance across the band?

The resistors were checked and found to be within tolerance and the valves were in good order too.

The rear view of the A-141. Restoring the chassis to pristine as-new condition would be a lot of work and then would raise questions about its authenticity. In this condition, you know it's the genuine article.

The speaker was a sorry mess, as can be seen in one of the photographs. It had been eaten by moths and it didn't sound the best either. An exact replacement was not available, so a slightly smaller speaker of the same impedance was fitted. The original speaker had a bracket for the speaker transformer and I had to make one so that the transformer could fit into the same place as the original. There was no room to fit it anywhere else, plus it was necessary to keep it as far away from the power transformer as possible. Even then, the speaker transformer had to be orientated so that minimal hum was induced into it.

Checking for shorts

Now it was time to get serious with the receiver and see what it would do on air. I did all the usual checks, be-

Meterman. The Working Man's Meter.

Meters that fit your job. Meters that fit your wallet.

Introducing Meterman, a hot new brand of test and measurement tools that gives you the performance you need at a price you can afford. Meterman is a line of more than 60 meters, clamps, and testers. Each one designed with the right combination of features, functions and accuracy to fit your application.

You work hard on the job. Get the tool that's easy on your wallet. Ask your local test and measurement supplier for the Meterman products or contact Meterman on Locked Bag 5004 Baulkham Hills NSW 2153, phone 02 8853 8812 or fax 02 8850 3300, or visit **metermantesttools.com**

The loudspeaker cone was badly motheaten which meant that the speaker had to be replaced.

ginning with the transformer, for any potential shorts between frame and the various windings using the high voltage tester. All was well.

While this set has a twin-core power cord as originally manufactured, if you cannot test the transformer as I did, I would suggest that the twin-core lead be replaced with a 3-core power cord so that the chassis is earthed.

I then ran the set with no valves to check whether the transformer had any shorted turns. Both tests were successful and the transformer was quite cool after a half-hour run. Next, I checked for any shorts between the high tension (HT) line and earth. There were none and I plugged in the 6X5GT and measured the HT voltage as the set warmed up. I turned it off after about 30 seconds to let the capacitors discharge and went through the same procedure a few times until the voltage reached a consistently high voltage on each test.

Really, what I was doing was making sure that the electrolytic capacitors "formed up" without getting too hot or causing the 6X5GT to be overloaded by the forming current. All was well. The rest of the valves were then installed and the set turned on again with an aerial attached. Music, glorious music.

Alignment

The alignment of a simple receiver like this is not unduly difficult. With a digital voltmeter connected across the volume control, it is possible to align the IF by tuning to a station and adjusting the four IF transformer cores for a peak DC reading on the meter. I prefer to align sets with a signal generator but this method works fairly well.

The aerial and oscillator circuits are a bit more complex. As I mentioned earlier, the dial scale stays in the cabinet so the dial pointer has no real reference point. Firstly, slide the chassis into the cabinet and make sure that the pointer coincides with the one of the end of scale markings when the gang is closed or fully open. At the low end of the dial, tune to a station that you know well around 600kHz. It might not coincide with the markings on the dial.

Next, set the pointer to the position that identifies that station. If you are lucky, the station and the markings on the scale will coincide. If the station is not heard on its indicated position, it will be necessary to adjust the slug in the oscillator coil, L2. To gain access to the coil, it is then necessary to withdraw the chassis from the cabinet again. If the station is heard at a higher indicated frequency than it should, screw the slug out and if heard lower in frequency screw the slug in, until you hear it. The core of the aerial coil, L1, can now be adjusted for maximum reading on the digital voltmeter.

At the other end of the dial, around 1500kHz, select another station that you know and repeat the same procedure to tune the station in on the correct spot on the dial. This time however, you adjust C5, which is the trimmer across the oscillator tuning capacitor. C1, the aerial trimmer, is then adjusted for best performance as indicated on the voltmeter.

It will be necessary to go over these aerial and oscillator adjustments a few times as they interact with each other. This is a simple method of aligning a receiver. With practice you can become quite speedy with it. It isn't the quickest method but is one that can be done with minimal equipment.

Now would you like the answer to the question I put to you earlier? If C12 goes leaky, not a lot happens with weak stations that are listened to at low volume. However, if the volume is turned up and you tune across the band, the volume of strong stations will decrease and in some sets it may even disappear. Adjusting the volume control in some cases causes very little change in volume.

Why? When C12 becomes leaky it puts a negative voltage onto the grid of V3 which reduces its amplification and may even cut the valve off. This effect is more obvious in sets that use a 6AV6 or similar, with contact potential bias (10MΩ grid resistor). The amount of extra negative bias is controlled by the position of the slider on the volume control and the strength of the station being received.

Summary

This model is quite a nice little receiver that fits very snugly into its cabinet. It is rather crowded on top of the chassis but things underneath are quite accessible. It performs well but I'm sure that the C-141 version would have been a much better set. As a kitchen radio it does its job very well and is quite attractive in its own way. It is well worthy of a place in any vintage radio collection. **SC**

ASK SILICON CHIP

Got a technical problem? Can't understand a piece of jargon or some technical principle? Drop us a line and we'll answer your question. Write to: Ask Silicon Chip, PO Box 139, Collaroy Beach, NSW 2097.

Distortion in digital delay unit

Some time ago, I purchased two 20ms Digital Delay Units (SILICON CHIP, March 1996) from Jaycar for use in my hifi system. Since building them I have become dissatisfied as they are prone to distort on heavier passages of music. On high frequencies they sound very good but on lower frequencies they both distort.

The circuits are taking about 25mA as opposed to the 100mA stated on the instruction sheet and this current is drawn with an input signal of about 250mV. The chip in the circuit is the M65830BP CMOS delay IC.

Any light you can throw on this problem would be greatly appreciated. (C. L., Upper Hutt, NZ).

● The 20ms delay circuit will distort if the input signal goes above about 300mV RMS. This would be more noticeable at the lower frequencies because the filtering and digital conversion allows the full signal level at these frequencies.

You can reduce the distortion by attenuating the input level applied to the delay circuit. This can comprise a volume control potentiometer. A 10kΩ log would be suitable, with one side of the pot connecting to ground. The wiper connects to the 20ms delay circuit input and the other side of the pot can connect to the signal source. Adjust the level for best noise performance but without distortion.

Photo-interrupter for PIC speed alarm

I have built the PIC Speed Alarm, as described in the November & December 1999 issues, using a kit purchased from Jaycar. A friend told me that the magnet/coil arrangement can be omitted and replaced with a photo interrupter.

Does this mean that the circuit involving IC2a and all the stuff coming off pin 6 of IC1 can be removed? I note that the PIC Rain Gauge descried in the June 2000 issue does use a photo interrupter sensor; ie, the 1kΩ and 100kΩ resistors and the 0.1μF capacitor connected to pin 6 of IC1. Can this serve as a pulse generator for speed input? (S. N., via email).

● We used a magnetic pickup to detect shaft rotation because it allowed a fair movement between the magnet and pickup when their relative positions changed with suspension movement. Also the arrangement will work without concern for dirt or dust build up.

While you could use a photo interrupter as per the rain gauge circuit, there would be little allowance for any lateral movement of the driveshaft. Also the sensors would quickly become fouled with dirt. We would not recommend it.

Balanced input for 1-chip compressor

I recently constructed your audio compressor kit and found it works superbly, the only drawback being the unbalanced input. While this is fine for guitars, most quality microphones are balanced. The input buffer appears to be capable of a balanced input. Which would be better: (1) reconfigure the input (if so, how would you go about it?); or (2) add a switchable balanced input stage? (P. G., via email).

● The compressor does not have facility for balanced inputs. You will need to make up a balanced amplifier and feed the output which is unbalanced into the compressor. The Analog Devices SSM2017P balanced microphone preamplifier IC is ideal. This device is used in the Altronics kit K-5531 (balanced input microphone preamplifier) which was published in April 1995.

The IC is available from Altronics (Cat Z-2800).

Jacobs ladder has no spark

We have recently built the Jacobs Ladder kit described in the September 1995 issue of SILICON CHIP but it did not produce a spark. We tested transistor Q1 and found it was producing a square wave at about 10-12V. Q2 also appears to be working. Can you offer any other advice on setting up the circuit? M. D., via email).

● The first thing to check is the ignition coil. If it has an internal short it

Locating interference to AM radio

Has SILICON CHIP ever published an article on how to locate interference to AM radio? I suspect a switched mode power supply from one of my neighbours is causing annoying interference on the main radio station I listen to – 612kHz (4QR) in Brisbane. The interference is there most of the time at night but it sometimes disappears.

The noise is worst on a mains-powered radio but I can hear it in my car radio as I pull into the driveway. Is it possible for my burglar alarm to be causing the problem? I have eliminated all the PCs in my own home by switching them off and the noise is still there. (A. J., Riverhills, Qld).

● We have not published an article on locating interference to AM radio but the usual method is to use a sensitive AM portable radio with a long ferrite rod antenna. You will find that this is highly directional and can be used to pinpoint interference provided it is radiated directly from the source and not from surrounding mains wiring.

Other possible sources of interference are Pay-TV cables/decoders, telephones, light dimmers, compact fluorescent lamps, electronic dishwashers and washing machines (even when on standby).

TV boosting & conversion

I want to step down UHF TV (five channels) from a local country TV repeater to VHF for use in a small motel with only VHF sets (the UHF/VHF ones get pinched).

There are any number of dead video recorders available which can still function as a tuner only, providing a good AV output to play with.

In the August 1989 issue of "Electronics Australia" they featured a RGBI to PAL encoder/modulator which used an RF modulator in a tiny metal case for VHF Channel 1. In the July 1999 issue, SILICON CHIP featured a video transmitter with an LM3850 video modulator (from Jaycar). Are these only available with Channel 0 or 1 output; ie, can you get units for other VHF channels (with PAL D output)?

I need five channels. The video recorders can provide two (channels 0 & 1 VHF) but I need another three channels. There is lots of information and products shown on various US websites but most seem to be for UHF and/or NTSC systems.

I want to re-transmit the received UHF TV signals at reasonable strength on a ridge down about 500 metres into a valley in which there is next to no signal. I have in mind to put a 91-element receiving Yagi on one side of the ridge and connect through a 44dB UHF antenna booster (Kingray) into another Yagi pointed down into the valley.

Both yagis have a fair front-to back ratio and would be well-separated. Can you suggest any better way? I don't think I can afford a full-blown translator or whatever is current for such a problem. (P. B., via email).

● Your idea sounds feasible but we would be inclined to try modifying the inbuilt modulator in your defunct VCRs to shift up from Ch0 or Ch1 and get the extra VHF channel signals that way.

won't work. You can check it easily by feeding 12V to it and switching it on and off manually.

If that is not the cause, the waveforms at Q1 should be checked on an oscilloscope. The base drive at pin 3 of IC1 should be an approximate square wave with a 3ms high time and 3ms low time. The collector of Q1 should be high (at 12V) for 3ms and off for the next 3ms.

Waveforms at the collector of Q2 need to be checked using a 10:1 probe. Set the vertical sensitivity at 5V to give an overall setting of 50V/division with the 10:1 probe. The collector volts should vary from 0V when switched on to about 225V DC when off. This is assuming that an ignition coil is connected.

The 225V is set by the zener diode voltage string ZD1-ZD3. Check that the zener diodes are connected with the correct orientation on the PC board.

Turbo timer for diesels

I was wondering if the Turbo Timer described in the November 1998 issue is compatible with diesel engines, specifically the Mitsubishi 4D56 2.5L Turbo Diesel? (E. B., via email).

● The Turbo Timer keeps the engine running in a petrol engine by maintaining the ignition supply even though the ignition switch has been turned off. If your diesel engine uses an electrical switch to apply power to a fuel solenoid, then the Turbo Timer can be used in the same manner to maintain power to this after it has been switched off at the "ignition" switch.

Big ask for sound level meter

I want to know if it is possible to make a modification to the Sound Level Meter adapter published in the December 1996 issue so I can measure higher dB levels. I would prefer to be able to measure up to 180dB or as close to that as possible.

The reason I require this mod is because I am an amateur car stereo installer and would like to be able to prove the "bone-crushing dB" I can get out of the systems I install. (R. J., via email).

● While we are sure you are producing very high levels, a sound pressure level of 180dB would disintegrate buildings, kill any animal, etc. Get the picture. In reality, somewhere around 125dB is the threshold of pain for most people and jet aircraft at close range produce around 140dB. In any case, electret microphones are only good for about 130dB, as far as we know.

You could also never get enough power to produce the levels you are talking about. If it took a 500W system to produce 120dB, to get to 130dB you would need ten times the power, ie, 5000W; to get 140dB you would need 50kW and so on.

Moisture sensor for clothes dryers

How about an add-on for your clothes dryer that gives it shut-off-when-clothes-are-dry capability? All you need is a (high temperature) moisture sensor you place at the dryer exhaust, some mains switching and a start-up delay to allow time for the exhaust air to become moist. The existing mechanical timer could be used as a backup to stop the machine. You could also monitor the mains input current and light a LED if the mechanical timer times out before the clothes are dry. (D. T., via email).

● As we understand it, some dryers already have a moisture sensor. Some of these are based on horse hair while others are solid-state (made by Philips, etc). The only real problem we see with the idea is finding a position for the sensor in the exhaust where it will not be clogged by lint. We are not sure how commercial dryers solve that problem.

Excessive voltage from electric fence

I have built the Electric Fence project described in the April 1999 issue and it works well, apart from a terrific arc across the output transformer to the PC board. I have rewound the coil three times, each time as per the instructions. I even made up a couple of 2mm Lexan spacers to keep the turns away from the former edges and lifted the transformer about 6mm off the board but I still get arcing. Any suggestions? (P. R., via email).

● You do not say where the arcing is occurring. Is it from within the trans-

Possible ghost in amplifier

I just bought a Technics SU-V460 amplifier and when searching the net I came upon your page www.siliconchip.com.au/html/featserv.htm where I found the SU-v460 under the title "When The Ghost Comes Early". What does that mean? Have I bought a problem amplifier? (How about the sound? Is it garbage?

I had a really old Pioneer before and I think it sounded better; it had a warmer round sound. (M. J., via email).

- "When the Ghost Comes Early" was the headline on a TV Serviceman story in our December 1991 issue and it also included a servicing story on the Technics amp. If you would like a copy we can supply the December 1992 issue for $7.70 including postage.

We have not had any experience with the SU-V460 but we would expect it to be fairly run-of-the-mill. Some, but not all, older amplifiers may sound better than some newer amplifiers (we are hedging a fair bit here) because most older amplifiers had discrete output stages whereas quite a few modern amplifiers are based on monolithic designs (ie, large ICs).

former to the PC board or from the transformer output lead to the PC board? Also where does the arc go to on the PC board? Moving the transformer should prevent arcing to the PC board. Perhaps the PC board does have a fine unetched copper area under the transformer area. Alternatively, the DC-DC converter section may be producing a very high voltage. This should be checked out.

Dimming problem with speed alarm

I recently built the Speed Alarm described in the November & December 1999 issues and apart from stuffing up the location of the sensing unit and having the driveshaft kill it I am very pleased with the unit's operation and the ease of changing settings. The sensitivity of the LED display at night in dim mode is irritating as street lights cause it to go from intense to dimmed too easily. Very bright sunlight also makes the unit difficult to read. Is there anything I can do to improve this situation.

Could the unit be adapted to work as a cruise control as this feature would be nice to have when driving on the highway? (M. D., Donvale, Vic).

- The dimming is supposed to operate quickly so that the brightness of the display reacts to the prevailing light conditions, to make it easy to read. You can slow down the dimming reaction time by connecting a capacitor across the LDR. A 100µF 16VW electrolytic would be suitable but take care with the polarity.

There is little that can be done to make the specified LED displays visible in direct sunlight. They need to be shaded from sunlight. Alternatively, you can use sunlight-readable common anode displays such as the HDSPH151 types from Agilent Technologies. Farnell sell these under their catalog number 264-313. Phone 1300 361 005.

The unit is not suited to operating a cruise control.

FM transmitter for guitars

I am interested in the Minimitter described in the April 2001 issue. Would this type of transmitter work well in a guitar setup? Would the signal be of good quality and hold true to the guitar? Also what type of kit would you suggest for the receiver. I plan on connecting the receiver kit direct to my amp.

- The Minimitter should work well with guitars. We have described a mono FM receiver in the November 1992 issue but we would be inclined to use a good quality AM/FM stereo tuner to drive your amplifier. Better still, since you are likely to moving around a stage, you may like to consider our Dual Diversity FM Tuner described in the August & September 1994 issues. This design has two in-built FM tuners and constantly switches between the two to give the best reproduction.

Notes and Errata

PowerPack, May 2001: the PC board number should be 11305011.

AA-cell White LED Torch, May 2001: the PC board number should be 11205011.

LP Doctor, January & February 2001: the overlay diagram and parts list in the February issue describe the dual ganged 50kΩ front panel sensitivity pot as VR2. It should be VR4. Similarly, the testing procedure under adjustment (4) mentions VR2 being set at mid-position. This should refer to VR4.

4-Digit Counter, May 2001: the text on page 41 text describes the SET switch as SW1. It should be SW2. Similarly, the INC switch is referred to as SW2 and it should be SW1. SC

WARNING!

SILICON CHIP magazine regularly describes projects which employ a mains power supply or produce high voltage. All such projects should be considered dangerous or even lethal if not used safely. Readers are warned that high voltage wiring should be carried out according to the instructions in the articles. When working on these projects use extreme care to ensure that you do not accidentally come into contact with mains AC voltages or high voltage DC. If you are not confident about working with projects employing mains voltages or other high voltages, you are advised not to attempt work on them. Silicon Chip Publications Pty Ltd disclaims any liability for damages should anyone be killed or injured while working on a project or circuit described in any issue of SILICON CHIP magazine. Devices or circuits described in SILICON CHIP may be covered by patents. SILICON CHIP disclaims any liability for the infringement of such patents by the manufacturing or selling of any such equipment. SILICON CHIP also disclaims any liability for projects which are used in such a way as to infringe relevant government regulations and by-laws.

Advertisers are warned that they are responsible for the content of all advertisements and that they must conform to the Trade Practices Act 1974 or as subsequently amended and to any governmental regulations which are applicable.

MARKET CENTRE

Cash in your surplus gear. Advertise it here in Silicon Chip.

Place your classified advertisement in SILICON CHIP Market Centre and your advert will also appear FREE in the Classifieds-on-the-Web page of the SILICON CHIP website, www.siliconchip.com.au. And if you include an email address or your website URL in your classified advert, the links will be LIVE in your classified-on-the-web!

EXCLUSIVE TO SILICON CHIP!

CLASSIFIED ADVERTISING RATES

Advertising rates for this page: Classified ads: $11.00 (incl. GST) for up to 12 words plus 55 cents for each additional word. Display ads: $27.50 (incl. GST) per column centimetre (max. 10cm). Closing date: five weeks prior to month of sale.

To run your classified ad, print it clearly in the space below or on a separate sheet of paper, fill out the form & send it with your cheque or credit card details to: Silicon Chip Classifieds, PO Box 139, Collaroy, NSW 2097. Or fax the details to (02) 9979 6503.

Taxation Invoice ABN 49 003 205 490

_____

_____

_____

_____

_____

Enclosed is my cheque/money order for $_____ or please debit my

☐ Bankcard ☐ Visa Card ☐ Master Card

Card No. | | | | | | | | | | | | | | | | |

Signature_____ Card expiry date_____/_____

Name _____

Street _____

Suburb/town _____ Postcode_____

FOR SALE

PC DIGITAL VIDEO & AUDIO RECORDER - Alarm Inputs & Outputs - Dial-In Remote Viewing – Auto Dial-Out to Pagers – Telephones – PC – WWW from $599 * VCR Controller use a home VCR for Surveillance Event Recording Wireless IR Control only $39 *** EXTRA High 600 + H-Line Modules – Domes – Covert in PIR Case with SONY Super HAD CCD & SONY Chipset from $122** * Mini Cameras from $61 COLOUR from $85 *** TIME LAPSE 24 hour VCRs from $599 National Service Centers * Multinational Manufacturer ! * QUAD 1024 H-Pixels from $175** * COLOUR QUAD only ! $389 *** DOME VIDEO CAMERAS from $53 ! COLOUR from $77 !** BULLET from $97 **TWO YEAR WARRANTY** * DIY PLUG-IN 20 m AV Cables from $20 *** DOME 480 Line 0.05 Lux SONY CCD & ChipSet from $81** * COLOUR DSP DOME: 400 Line from $139 * 600 + Line from $164 *** COLOUR DSP PIN in PIR CASE from $152** * MINI CAMS from $67 *** DSP COLOUR from $133** * PC **W98/W2000** REMOTE VIEW, PAGING, WEB-CAM, DVR System High 768 x 576 Resolution from $219 *** MULTI-PLEXER 4 Ch from $633** * 4 Ch / 8 Ch Switchers only $79 / $99 ! COLOUR Bullet Cameras from $122 *** Digital PC 4 Ch Video Recorder System from $159** * BLEMISH FREE & LOW BLEMISH CCDs *** UP TO 5 YEARS WARRANTY** * OVERNIGHT DELIVERY *** www.allthings.com.au**

Go to www.questronix.com.au for Video Equipment, Information, Techo Links & Monthly Specials.

TELEPHONE EXCHANGE SIMULATOR: test equipment without the cost of telephone lines. Melb 9806 0110. **http://www.alphalink.com.au/~zenere**

WEATHER STATIONS: Windspeed & direction, inside temperature, outside temperature & windchill. Records highs & lows with time and date as they occur. Optional rainfall and PC interface. Used

by Government Departments, farmers, pilots, and weather enthusiasts. Other models with barometric pressure, humidity, dew point, solar radiation, UV, leaf wetness, etc. Just phone, fax or write for our FREE catalogue and price list. Solar Flair/Ecowatch phone: (03) 5968 4863; fax: (03) 5968 5810, PO Box 18, Emerald,, Vic., 3782. ACN 006 399 480.

KITS KITS AND MORE KITS! Check 'em out at **www.ozitronics.com**

SEE-in-the-DARK Camera with in-built IR LEDs in Water Resistant Case for disturbance-free Baby - Bird - Animal observation from $147 * **NEW Wireless Version available NOW !** * www.allthings.com.au

UNIVERSAL DEVICE PROGRAMMER: Low cost, high performance, 48-pin, works in DOS or Windows inc NT/2000. $1320. Universal EPROM programmer $429. Also adaptors, (E)EPROM, PIC, 8051 programmers, EPROM simulator and eraser.

Dunfield C Compilers: Everything you need to develop C and ASM software for 68HC08, 6809, 68HC11, 68HC12, 68HC16, 8051/52, 8080/85, 8086, 8096 or AVR: $198 each. Demo disk available.

ImageCraft C Compilers: 32-bit Windows IDE and compiler. For AVR, 68HC11, 68HC12. $396.

Atmel Flash CPU Programmer: Handles the 89Cx051, 89C5x, 89Sxx in both DIP and PLCC44 and some AVR's, most 8-pin EEPROMS. Includes socket for serial ISP cable. $220, $11 p&p. SOIC adaptors: 20 pin $99, 14 pin $93.50, 8 pin $88.

Full details on web site. Credit cards accepted.

GRANTRONICS PTY LTD, PO Box 275, Wentworthville 2145. (02) 9896 7150 or http://www.grantronics.com.au

HOME CCTV Mono / **Colour** PAKS **only !** $119 / **$151** Full DIY Plug-In to TV / VCR 20 metre Cable, Plug Pack & Camera **www.allthings.com.au**

DIGITAL OSCILLOSCOPE kit. www.ar.com.au/~softmark

RCS HAS MOVED to 41 Arlewis St, Chester Hill 2162 and is now open, with full production. Tel (02) 9738 0330; Fax 9738 0334. rcsradio@cia.com.au www.cia.com.au/rcsradio

ROLA AUSTRALIA

PH/FAX (08) 8270 3175 WEB SITE WWW.BETTANET.NET.AU/GTD

CHECK OUR WEBSITE FOR DETAILS ON KITS AND COMPONENTS

- TRANSMITTER KITS AND MODULES
- AUDIO MODULES
- COMPUTER INTERFACE KITS
- RADIO STATION AUDIO SOFTWARE

NEW: Our MP3-CD player in short form for $169 inc GST. Includes the following: processor board, front panel display and tactile keypad; just add a case, cables, 12V power supply and a CD-ROM drive. Play CDs and up to 2600 MP3's from a CDR. Great for car or home.

Satellite TV Reception

International satellite TV reception in your home is now affordable. Send for your free info pack containing equipment catalog, satellite lists, etc or call for appointment to view. We can display all satellites from 76.5° to 180°.

AV-COMM P/L, 24/9 Powells Rd, Brookvale, NSW 2100.
Tel: 02 9939 4377 or 9939 4378.
Fax: 9939 4376; www.avcomm.com.au

Printed Circuit Board Manufacture

48-Hour service • High quality • Low prices
1 offs to any quantity
Artwork design if required
Call for obligation free quote...
INSTANT PCBs, POBox 448, Avalon 2107
Ph (02)9974 1189 Fax (02)9974 5491

INSTROTECH VHF data transceiver

e-mail instrotech@senet.com.au

Spread-spectrum VHF low power unlicensed data transceiver. Single board radio only 136 x 60mm, plus various I/O options. Up to 10km in line of sight. Made in Australia.

INSTROTECH ALSO MAKE DIGITAL INDICATORS AND TRANSMITTERS

www.instrotech.com.au Tel 1800 999 063

DIY CCTV PAKS

4 Cameras & Switcher	$354
as above COLOUR	$466
4 Cams, Switcher/Monitor	$495
4 Cams & QUAD	$478
4 COLOUR & QUAD	$752

Time-Lapse 24 hr VCR only $599 with CCTV Systems!

MORE at: www.allthings.com.au Fully Plug-In DIY Paks with Cables & Power Supplies * **PC W98/W2000 Digital Motion/Sound detection & activated Video/Audio Recording systems.**

PCBs MADE, ONE OR MANY. Low prices, hobbyists welcome. Sesame Electronics (02) 9586 4771.

Model Flight Control Modules

PDC 01	SERIAL INTERFACE	$198.60
PDC 10	GPS INTERFACE MODULE	$398.00
PDC 20	ALTITUDE HOLD MODULE	$498.00
PDC25	SPEED HOLD MODULE	$498.00
PDC 400	ALTIMETER AIR-DATA SENSOR	$398.40
PDC 450	AIRSPEED-AIR DATA SENSOR	$398.00
PDC1200	VIDEO OVERLAY (PAL-D)	$698.60
TRACKER GPS TELEMETRY SOFTWARE		$198.60

PDC 3200 AUTOPILOT AND GROUNDSTATION: PRICE ON APPLICATION (PRICE DEPENDS ON CONFIGURATION).

(ALL PRICES INCLUDE GST)

Silvertone Electronics,
PO Box 580, Riverwood 2210.
Phone/Fax (02) 9533 3517.
www.silvertone.com.au

Positions At Jaycar

We are often looking for enthusiastic staff for positions in our retail stores and head office at Silverwater in Sydney. A genuine interest in electronics is a necessity. Phone 02 9741 8555 for current vacancies.

Need prototype PC boards?

We have the solutions – we print electronics!
Four-day turnaround, less if urgent; Artwork from your own positive or file; Through hole plating; Prompt postal service; 29 years technical experience; Inexpensive; Superb quality.

Printed Electronics, 12A Aristoc Rd, Glen Waverley, Vic 3150.
Phone: (03) 9545 3722; Fax: (03) 9545 3561

Call Mike Lynch and check us out!
We are the best for low cost, small runs.

sesame@internetezy.com.au http://members.tripod.com/~sesame_elec

VIDEO amplifiers, Stabilisers, TBCs, Converters, Mixers, etc. **QUESTRONIX** (02) 9477 3596.

KIT ASSEMBLY

NEVILLE WALKER KIT ASSEMBLY & REPAIR:

- Australia wide service
- Small production runs
- Specialist "one-off" applications

Phone Neville Walker (07) 3857 2752
Email flashdog@optusnet.com.au

continued next page

DON'T MISS THE 'BUS

Do you feel left behind by the latest advances in computer technology? Don't miss the bus: get the 'bus!

Includes articles on troubleshooting your PC, installing and setting up computer networks, hard disk drive upgrades, clean installing Windows 98, CPU upgrades, a basic introduction to Linux plus much more.

Price: $12.50 (incl. GST) Order now by using the handy order form in this issue or call (02) 9979 5644, 8.30-5.30 Mon-Fri with your credit card details.

Special subscription offer available only while stocks last.

Silicon Chip Binders

REAL VALUE AT $12.95 PLUS P&P

★ Each binder holds up to 14 issues ★ Heavy board covers with 2-tone green vinyl covering ★ SILICON CHIP logo printed in gold-coloured lettering on spine & cover

Price: $A12.95 plus $A5.50 p&p each (Australia only; not available elsewhere). Buy five and get them postage free.

Just fill in & mail the handy order form in this issue; or fax (02) 9979 6503; or ring (02) 9979 5644 & quote your credit card number.

WANTED

PERSON WITH EXPERIENCE / APTITUDE able to fault find & repair PCBs – without diagrams. GENEROUS PKG NEG. Tel John@AER (03) 9482 4958 0415 305 470.

Early Hifi's, Amplifiers, Speakers, Turntables, Valves, Books; Quad, Leak, Pye, Lowther, Ortofon, SME, Western Electric, Altec, Marantz, McIntosh, Goodmans, Wharefdale, Tannoy; radio and wireless. Collector/Hobbyist will pay cash. (07) 5449 1601. johnmurt@highprofile.com.au

BUSINESS FOR SALE

Business for sale. Industrial service and design. Sydney area. Would suit self-employed person. $10,000. Phone (02) 9484 3930.

HELP SAVE THE NIGHT SKY!

We are losing our heritage of starry night skies. Poor, inefficient outdoor lighting is causing glare and "light pollution". This wastes energy and increases greenhouse gas emissions.

You can help by joining SYDNEY OUTDOOR LIGHTING IMPROVEMENT SOCIETY (SOLIS). SOLIS aims to educate and inform about quality outdoor lighting and its benefits. We also lobby councils, government and other bodies to promote good lighting practice. SOLIS meetings are held third Monday night of each month at Sydney Observatory.

Individual membership is $20 pa. Donations are also welcome. Cheques payable to "SOLIS c/-NSAS", PO Box 214, West Ryde 2114. Email: tpeters@pip.elm.mq.edu.au

Advertising Index

Altronics 86-88
Aust. Video Systems 69
Allthings Sales & Services 102,103
Av-Comm Pty Ltd 103
Cornick 18
Dick Smith Electronics 20-23
Grantronics 103
Harbuch Electronics 90
Instant PCBs 103
Investment Technologies 79
Jaycar 49-56
Mass Electronics 91
MicroZed Computers 91
McGraw Hill ..... IFC
Microgram Computers 3,OBC
Oatley Electronics ..... IBC
Printed Electronics 103
Pottery Supplies 90
Questronix 91,102
RF Probes 91
RobotOz 91
Rola Australia 103
R.T.N. 91
Semtron Electronics 61
Silicon Chip Back Issues 92-93
Silicon Chip Binders 104
Silicon Chip Bookshop 46-47
SC Computer Omnibus 104
Silicon Chip Subscriptions 85
Silvertone Electronics 103
Solar Flair/Ecowatch 102

PC Boards

Printed circuit boards for SILICON CHIP projects are made by:

- RCS Radio Pty Ltd. Phone (02) 9738 0330. Fax (02) 9738 0334.

NEW ITEMS OF THE MONTH

OPTO PACK 104 DEVICES:

various colours & types. Top brands Siemens etc just $10 VISIBLE LEDs...5mm...14X Yellow clear, 6X Red (clear) 24deg, 2X Yellow (clear) 24deg, 16X Red (clear) 24deg,38X Green (clear) 24deg VISIBLE LEDs... 3mm...14X Red diffused 70deg. 4X 3mm or rect. Yel. diffused 70deg SPECIAL...1X 5mm IR,3X 3mm Clear Phototransistor, 3X 5mm Phototransistor, 1X IR RX module. 2X DIL rect. black PIN Photodiode.

SPECIAL

(NEW) 5 IN 1 PRE-PROGRAMMED REMOTE CONTROL:

This remote is designed to work 100's of different brands of TV's, VCR's etc. A chart is supplied with infraction on how to program the remote for each appliance. Remote can be used to operate up to five devices at a time. Powered from 2 x AAA batt. (not supplied): (RC1) $15 each

****NEW**NEW**NEW****

FUTABA 2 CHANNEL RADIO CONTROL

This item is new in Its original box.

2 ER A high-tech, low-priced 2-channel radio. This two-stick, digital proportional AM system is ideal for robotics, R/C cars, boats and planes etc. Features include fine trims that are easily accessible on the front panel, Short sticks that allow for full range of movement and Servo Reversing. Includes two S3003 servos, a R122JE receiver, battery holder, power switch and other accessories. All for just $100

(NEW) MULTI FUNCTION BATTERY CHARGER / DISCHARGER:

New in original box with instructions. This unit was designed to charge Ni-CD & Ni-MH mobile phone batteries of 4.8V, 6.0V and 7.2V. Operates from 12-24V DC input. Features include processor control & multi stage charge indicator. By changing the value of one resistor it can charge higher voltages, although a higher voltage plugpack is required for 9.4V or higher. Includes cigarette lighter lead, 12V / 1A DC plugpack & instructions for modifications for higher voltages. The unit has battery charging terminals but the user will have to make their own adaptor to interface to a battery. The plugpack supplied alone is worth around $30 retail. Weight is 0.9kg. $29... 15V DC / 1A Plugpack for charging batteries 9.4V or higher: (ZA0055) $6

If you ask when ordering you will receive a free 6-pack of batteries.

(USED) AUSTRALIAN IEC LEADS:

Has 3 pin Australian mains plug approximately 1 metre long lead: (PL2) $2 each

2.4GHz SMALL VIDEO/STEREO AUDIO TRANSMITTER KIT

$159

Most transmitters on the market promise 100-200M range & deliver only 50M on open ground with line of site. We tested it in an urban area, in a less than an ideal environment, under power lines, over metal fences & through houses at 200M. At 200M we had a perfect picture, no lines or snow etc. We are working on a Di-pole antenna that should give more than 1 Kilometer range. Easy to build with professionally built modules. Kit available next month. Subscribe to our E-mail list for mor details.

SERIAL SERVO CONTROLLER KIT: This kit is ideal for robotics kits etc, it controls up to 5 servos via the serial port of your computer. A lot of shareware and support for this kit on the Internet. Features inc. small kit size & hi servo resolution. Kit inc. software, PCB & all onboard components. COMING SOON...around $24

SONY UNIVERSAL CAMCORDER BATTERY + CHARGER

Brand new in original packing Less than 1yr. old. 7.2V 1500mAh lithium-ion As commonly used with SONY digital cameras, camcorders, SONY and some other brand products . US made OPREX brand. Charger has an unusual plug that is easy to adapt. Requires power plug-pack (not supplied) 9V 1A (2A peak for 5 minutes)...$39.

VIDEO SYNC. STABILISERS

Various forms of copy protection are used on video tapes & DVDs, the problem is that the changes to the normal signal is that it may cause playback problems like the jitters. This device removes the copy protection by stripping and reinserting the sync. pulse & thus cleaning the picture. It has been suggested to us that these units could be used to copy commercial videos & DVDs but we do not condone any breach of copyright. This item comes as a ready built PCB with a new recycled metal case to suit. Just...$29

20 x 2 LCD BACKLIT CHARACTER DISPLAY:

Made by Optrex model #DMC2059 (this model is not listed on the Optrex web site but data is available for similar 20 x 2 displays). Each character measures approximately 6mm x 8mm, display area 122mm x x 30mm h. PCB dimensions 151mm wide x 56mm high. Uses standard Hitachi chipset (HD44780) mounted on a PCB with LED backlight & dual row 16 pin header: (DL8) $11 ea or 3 for $27

(NEW) 13V-1A PLUG-PACK: $12

4 CHANNEL VIDEO SWITCHER KIT

Our kit doesn't use CMOS bilateral switches (4066 etc.) as these chips suffer from crosstalk between chanels (at higher frequencies like those in video signals) and an on resistance that causes impedance miss-match. This kit can switch manually or sequentially up to 4 audio/video sources. Other features inc. VCR relay output to switch STOP/REC, can be switched with PIR or alarm system inputs Add a security channel to your TV using a VHF modulator, watch TV & flick channels & see who's at the door or what the Kids are doing. This unit can be switched automatically using the PIR units below. Kit +PCB+all on-board components inc. 18 relays. Less than Half price of most units $50.

12V/7AH SEALED LEAD ACID BATTERY BARGAIN:

2.6kg, 150 x 65 x 92mm: (PB6) $25

VIDEO SAMPLER

The output of these cameras below is std. video & can be plugged into the "VIDEO IN" socket of any Australian std VCR, video monitor or TV, or via an RF Modulator to an Ant. Input. The B/W cameras are Infra Red responsive & can be used in total darkness with IR Illumination.

MONOCHROME CCD VIDEO CAMERA

B&W Camera built on a PCB with auto iris. (1 lux). Can be focused sharply down to a few mm(useful for people with visual impairment). Spec.: Power req.: 10V to 12V @ approx. 50mA.CCD: 1/3", 30grams: $89, with 92° lens: $99

SUGAR CUBE CMOS B/W CAMERA

(Reviewed in Sth. Sept. 1999) This (16 x 16 x 15mm) black & white video camera includes a pinhole lens with a field of view of 56 x 42 degrees. Resolution is 240 TV lines (288 x 352 pixels), 1/3" CMOS Image Sensor, 2:1 interlace with a shutter speed of 1/60 to 1/60,000. Other features include auto exposure control, backlight compensation, auto gain control. Has an AGC disable pin which can be tied low for outdoor use. It operates from 5V DC and only draws 10mA: (CAM2) $70

8 CHANNEL PC CONTROLLED RELAY INTERFACE KIT: Ref: Silicon Chip Sept 2000. Operates eight relays from a PC parallel port. Kit inc. PCB & all on-board parts inc. eight relays (2 higher current) with indicating LED's & DB25 connector. Also some software, on disk. written in Basic to operate the kit: (K164) $40

A suitable DB25 male to DB25 female data cable is also available for this kit: (K164C) $8

PC POWER SUPPLY:

These NEW LITEON Brand power supplies include automatic mains power switch and have the following outputs... +5V @ 20A, -5V @ 0.5A, +12V @ 8A, -12V @ 0.5A. Input is 100-240V AC @ 50-60Hz via an IEC socket. Has internal fan. The case overall dimensions are 150 x 87 x 140mm: (PSPC4) $19 Includes free IEC lead

We have more used test equipment. we need to clear some to make way for the next lot. Check out our web site Great bargains at a fraction of the new cost. If it's not on our web site... ring us.

SUBSCRIBE

WANT TO SEE MANY MORE PRODUCTS AND BE UPDATED WITH NEW PRODUCTS, KITS, LOTS OF SURPLUS BEFORE THEY ARE ADVERTISED HERE

Just send a blank E-mail to: bargaincorner-subscribe@oatleyelectronics.com

SAMSUNG LITHIUM BATTERIES

As used for a short while during the olympics, 3.6V Li-Ion batteries, as used in Samsung SGH2400 mobile telephones. Standard battery model BTS24G: $7, Extended battery model BTE24G: $11. Lots of capacity in a small package! Priced for experimenters, probably worth 10 times this amount

AUSTRALIAN MADE BARGAIN NEW.... EVAPORATIVE WATER COOLERS

Features inc. economic design, safe 6VDC operation (Plugpack supplied), internal stainless steel reservoir. Can be used with commercially delivered water bottles or with a large soft-drink bottle...$35 (Bottle not supplied)

SOLAR PANELS: Quality SIEMENS brand Polycrystaline cells. Open circuit voltage 5.7V, Short circuit current 0.22A, Peak power 1W @ 100mW per square cm. 4 panels req. to charge 12V batteries. 150 x 55 x 5mm. Terminated with a 25cm long figure eight cable

$10 ea. or 4 for $36.

USED) 600WATT UNINTERRUPTIBLE POWER SUPPLY: Sola brand model 510 600W sine wave UPS. These are in excellent condition, and come with original batteries. Types inc common 12V / 7AHr batteries, Overall dimensions are 190H x 125W x 355D, weighs 12.7Kg. Has computer interface, The software and info on the internet. We guarantee operation and batteries will be useful on delivery.

If you need new batteries we can supply these for a reduced price of (PB6) $18 each. UPS plus IEC lead: (ZA0247) $160

CIGARETTE LIGHTER BATTERY ELIMINATOR:

Contains a small swiched mode power suppply PCB assembly , employs a 34063 very efficient, up to 500mA output, 10-35V input, output set for 9V output but this can be changed by changing one resistor, circuitnotes supplied, With curly cord, power LED and fuse $8

www.oatleyelectronics.com Orders: Ph (02) 9584 3563, Fax 9584 3561, sales@oatleyelectronics.com, PO Box 89 Oatley NSW 2223

major cards with ph. & fax orders, Post & Pack typically $7 Prices subject to change without notice ACN 068 740 081 ABN18068 740 081

EXCLUSIVE SPECIAL DIGITAL TV OFFER FROM MICROGRAM!

AT LAST! DIGITAL TV SET-TOP BOXES

Now you too can experience the biggest revolution to hit TV in the last 40 years - DIGITAL! You don't need a $$$$ digital TV; this set-top box plugs straight into your existing TV set and gives you all the advantages of Digital - including a much better picture in crook reception areas!

COMPLETE WITH REMOTE CONTROL & CABLES Cat 11811

WATCH DIGITAL TV ANYWHERE - WITHOUT CABLES!

Connect your Digital Set-Top box or DVD drive to one of these and watch Digital TV anywhere in or around your home - without cables (up to 300'). Goes through walls, floors, windows, etc and will even relay commands from your infrared remote control! Superb quality, stereo sound.

AUDIO/VIDEO 2.4GHz WIRELESS LINK - Cat 11808

FREE DATA SHEET: www.mgram.com.au

WHILE STOCKS LAST: BOTH FOR $929!

Need a KVM Switch (Multi-PC Controller)?

4-WAYMulti-PC Controller

Control 2, 3 or 4 PCs under DOS, Windows 3.x/9x/ME/NT/2000, Netware UNIX and Linux environments. PC selection is via push button or keyboard hot keys
Microgram Cat No 11655 - $432.00

8-WAY Controller

As above but handles up to 8 PCs. 19in rack-mount design (kit inc); hot plug/unplug facility.
Microgram Cat No 11656 - $949.00

If you have a multiple-computer installation, chances are you have one keyboard for every PC, one mouse for every PC and, of course, one monitor for every PC. And the one thing you don't have is any space left to do all the things you have those PCs for in the first place! KVM (keyboard, video, monitor) Switches from Microgram could be the answer to your prayers. Not only will they save you a lot of space AND a lot of headaches (like which monitor/keyboard/mouse belongs to which PC!) they can save you a lot of money. With a KVM switch you only need ONE keyboard, ONE video monitor and ONE mouse. A KVM switch will save you money from your second PC. And there are KVM switches to suit up to 16 PCs!

2-WAY PC Controller

Same functions as 4-way controller but handles 2 PCS: If you don't need the power of a 4-way switch why pay for it!!
Microgram Cat No 11654 - $221.00

16-WAY Controller

Similar to unit at left but handles a whopping 16 PCs. Rear view shown above (front similar to 8-way).
Microgram Cat No 11657 - $1299.00

MicroGram Computers

www.mgram.com.au
Tel (02) 4389 8444 Fax (02) 4389 8388
Unit 1, 14 Bon Mace Close, Berkeley Vale NSW 2261
Dealer Enquiries Welcome

Australia-wide Express Courier only $11.00 (to 3kg)

Vermeet Pty Ltd trading as Microgram Computers, ABN 60 003 062 100